1 city corrections **16 october 2023**

2 city corrections **08 december 2023**

heliotrope duplex

corona del mar, california 92625

407 heliotrope avenue

eric aust architect

22 may 2023

construction document submittal

alliance 24 title — energy calculations
140 "B" street, suite 5-276
davis, california 95616
tel 530.902.4387

R McCarthy consulting — geotechnical engineer
23 corporate plaza, suite 150
newport beach, california 92660
tel 949.629.2539

toal engineering — grading + drainage engineer
139 avenida navarro
san clemente, california 92672
tel 949.492.8586

esi/fme, inc. — structural engineer
1800 e. 16th street
santa ana, california 92701
tel 714.835.2800
fax 714.835.2819

JRC real estate development — client
14930 alondra blvd.
la mirada, california 90638
tel 562.623.9328

LICENSED ARCHITECT
ERIC D. AUST
C-29374
31 MAY 2025
RENEWAL DATE
STATE OF CALIFORNIA

eric aust — architect
62 balboa coves
newport beach, california 92663
tel 949.637.5220

general notes

1. GENERAL NOTES APPLY TO EVERY SHEET
2. ALL DIMENSIONS ARE ACTUAL, AND ARE FROM FINISH FACE OF WALLS OR BUILDING LAYOUT LINES, UNLESS NOTED OTHERWISE.
3. ARCHITECTURAL FINISH FLOOR ELEVATIONS ARE EXISTING TO T.O. PLYWOOD OR CONCRETE SLAB ON GRADE
4. ALL WOOD IN CONTACT WITH CONCRETE SHALL BE TREATED. THIS INCLUDES PLATES AND PLYWOOD.
5. CEILING HEIGHTS AS SHOWN IN REFLECTED CEILING PLANS ARE FROM FINISH FLOOR OF SCHEDULED ROOM. (T.O. PLYWOOD SUB-FLOOR OR CONCRETE SLAB)
6. THESE DRAWINGS ARE NOT TO BE SCALED
7. THESE PLANS HAVE BEEN DEVELOPED TO INDICATE A GENERAL SCOPE OF WORK TO BE PERFORMED. THE GENERAL CONTRACTOR AND SUBCONTRACTORS SHALL VERIFY ALL EXISTING CONDITIONS TO DETERMINE THE TOTAL SCOPE OF EXISTING CONDITIONS AND THE WORK REQUIRED TO COMPLETE THE PROJECT IN ACCORDANCE WITH THE INTENT OF THE CONTRACT DOCUMENTS, AND CONFORMANCE WITH ALL APPLICABLE CODES AND THE HIGHEST INDUSTRY STANDARDS. COSTS OF THE WORK SHALL BE INCLUDED IN THE CONTRACTOR'S BID. CHANGE ORDERS FOR OBVIOUS, VISIBLE OR FORESEEABLE CONDITIONS SHALL NOT BE ALLOWED.
8. CONTRACTOR SHALL REPORT TO THE ARCHITECT ANY INCONSISTENCIES OR CONFLICTS WITHIN THE CONTRACT DOCUMENTS PRIOR TO BID FOR A CLARIFICATION. IF A CLARIFICATION IS NOT MADE IN WRITING THE GREATER QUANTITY AND HIGHER QUALITY OF WORK SHALL BE BID.

general notes

9. ALL ASPECTS AND ITEMS NOT SPECIFICALLY MENTIONED BUT WHICH ARE NECESSARY TO MAKE A COMPLETE WORKING INSTALLATION SHALL BE INCLUDED IN THE CONTRACTORS BID.
10. THE CONTRACTOR SHALL VERIFY ALL EXISTING CONDITIONS AND ESTABLISH QUANTITIES BASED UPON THOSE CONDITIONS
11. ALL MATERIALS FOR USE IN THIS PROJECT SHALL BE NEW AND UNUSED UNLESS OTHERWISE NOTED.
12. CONTRACTOR IS RESPONSIBLE FOR REMOVAL AND PROPER DISPOSAL OF ALL DEBRIS GENERATED BY THIS CONSTRUCTION. THE JOB SITE SHALL BE KEPT CLEAN AND FREE OF WASTE MATERIALS.
13. ALL PIPING, CONDUIT AND DUCTS SHALL BE CONCEALED WITHIN WALLS, UNDERGROUND, OR IN ARCHITECT APPROVED UTILITY SPACES. IN ALL CASES UNLESS SPECIFICALLY NOTED OTHERWISE ON DRAWINGS. EXPOSED ITEMS MUST BE IN A LOCATION APPROVED BY ARCHITECT
14. NO ASBESTOS OR PCB CONTAINING MATERIAL SHALL BE USED ON THIS PROJECT.
15. NOT USED
16. ALL RATED DETAIL ASSEMBLIES SHALL BE APPROVED BY UL, ICC, FM, USG OR ANSI.
17. ALL INTERIOR PARTITIONS AND FLOORS TO BE INSULATED FOR ACOUSTICAL PRIVACY, WITH ACOUSTICAL BATTS.
18. ALL MATERIALS TO BE INSTALLED PER DRAWINGS, IN ACCORDANCE WITH MANUFACTURER'S SPECIFICATIONS, SUBSTITUTIONS ARE ALLOWED WITH OWNER AND ARCHITECT'S APPROVAL ONLY.
19. PROVIDE PROTECTIVE CONSTRUCTION FENCING (BETWEEN 72" AND 84" IN HEIGHT) ALONG THE PEDESTRIAN WALKWAY (SOUTH ELEVATION). PROVIDE ADDITIONAL PROTECTIVE FENCING IN ADDITION TO THE EXISTING FENCES ALONG THE REMAINING PROPERTY LINES AS REQUIRED

CITY OF NEWPORT BEACH
COMMUNITY DEVELOPMENT DEPARTMENT
BUILDING DIVISION
100 Civic Center Drive | P.O. Box 1768 | Newport Beach, CA 92658-8915
www.newportbeachca.gov | (949) 644-3200

ACKNOWLEDGMENT OF NO CONSTRUCTION-RELATED NOISE ON SATURDAY OR SUNDAY IN HIGH DENSITY AREAS

On June 11, 2019, the City Council adopted an ordinance restricting construction-related noise on Saturday in High Density Areas effective August 12, 2019.

I acknowledge that any construction-related noise, (including, but not limited to operating power equipment or machinery in a manner that produces noise) is not allowed on Saturday or Sunday in High Density Areas in accordance with Newport Beach Municipal Code 10.28.040. As the owner of the property, I am responsible to ensure all persons working on the property comply with this provision of the Newport Beach Municipal Code.

Project Address: 407 Heliotrope Avenue, Corona Del Mar, CA 92625

Permit Number: PC2023-1312

Owner's Name: Chris Hyun

Owner's Signature:

Contractor's Signature:

Date: 16 October 2023

FormAcknowledgment_No_Saturday_Construction_HighDensityAreas

high density area acknowledgement

project data

ROOF VENTILATION:
NOT REQUIRED SINCE EXPANDED ICENYNE INSULATION TO BE USED

FIRE SPRINKLERS:
FIRE SPRINKLERS ARE REQUIRED WITHIN THIS STRUCTURE AND SHALL BE SUBMITTED AS A DEFERRED SUBMITTAL UNDER A SEPARATE PERMIT

DESIGN PROFESSIONAL IN RESPONSIBLE CHARGE:
ERIC AUST ARCHITECT SHALL SERVE AS THE DESIGN PROFESSIONAL IN RESPONSIBLE CHARGE FOR THIS PROJECT AND SHALL BE RESPONSIBLE FOR REVIEWING AND COORDINATING SUBMITTAL DOCUMENTS PREPARED BY OTHERS, INCLUDING PHASED AND DEFERRED SUBMITTAL ITEMS, FOR COMPATIBILITY WITH THE DESIGN OF THE BUILDING
(CBC APPENDIX CHAPTER 1, 106.3.4)

GENERAL NOTES:
ISSUANCE OF A BUILDING PERMIT BY THE CITY OF NEWPORT BEACH DOES NOT RELIEVE APPLICANTS OF THE LEGAL REQUIREMENTS TO OBSERVE COVENANTS, CONDITIONS AND RESTRICTIONS WHICH MAY BE RECORDED AGAINST THE PROPERTY OR TO OBTAIN PLANS. YOU SHOULD CONTACT YOUR COMMUNITY ASSOCIATIONS PRIOR TO COMMENCEMENT

A CAL-OSHA PERMIT IS REQUIRED FOR EXCAVATION DEEPER THAN 5' AND FOR SHORING AND UNDERPINNING

RECYCLE AND/OR SALVAGE FOR REUSE A MINIMUM OF 65% OF THE NONHAZARDOUS CONSTRUCTION AND DEMOLITION WASTE IN ACCORDANCE WITH SECTION 4.408.1 CALGREEN CODE

THE MAXIMUM TIME TO COMPLETE CONSTRUCTION ON A PROJECT IS LIMITED TO THREE YEARS FROM THE DATE OF THE PERMIT FOR ALL PERMITS ISSUED AFTER AUGUST 21, 2019 AS REQUIRED BY NBMC SECTION 15.02.095

PROJECT INFORMATION SIGN:
PROVIDE A PROJECT INFORMATION SIGN AND CONSTRUCTION FENCING DUE TO LOCATION WITHIN "HIGH DENSITY AREA"; PROJECT SIGN SHALL COMPLY WITH N.B.M.C. SECTION 15.60.030

project data

SETBACKS:

	ALLOWABLE	PROPOSED
EAST PROPERTY LINE (FRONT):	15'	15'-11"
WEST PROPERTY LINE (REAR):	5'	5'-0"
NORTH PROPERTY LINE (SIDE):	3'	3'-0"
SOUTH PROPERTY LINE (SIDE):	3'	3'-0"

LOT SQUARE FOOTAGE:
4,720 S.F.

BUILDABLE LOT AREA:
3,332 S.F.

PROPOSED FLOOR AREA:

PROPOSED 1st FLOOR – UNIT 'A'	1,331 S.F.
PROPOSED 1st FLOOR – UNIT 'B'	395 S.F.
PROPOSED 2nd FLOOR – UNIT 'A'	1,120 S.F.
PROPOSED 2nd FLOOR – UNIT 'B'	1,258 S.F.
PROPOSED 3rd FLOOR – UNIT 'A'	290 S.F.
PROPOSED 3rd FLOOR – UNIT 'B'	84 S.F. +
PROPOSED TOTAL LIVABLE AREA	4,478 S.F.

GARAGE AREA:

PROPOSED GARAGE – UNIT 'A'	249 S.F.
PROPOSED GARAGE – UNIT 'B'	230 S.F.

FLOOR AREA LIMIT:
3,332 S.F. BUILDABLE LOT AREA:
1.5x BUILDABLE LOT AREA = 4,998 S.F.
4,957 S.F. (4,478 + 479) < 4,998 S.F. ALLOWABLE = O.K.

BUILDING HEIGHT:
MAX. ALLOWABLE BLDG. HEIGHT: 29' (TO PEAK OF SLOPED ROOF)
ACTUAL BUILDING HEIGHT: 28'-11 1/2" (FROM AVG. GRADE TO ROOF PEAK)

LANDSCAPE AREA:
235 S.F. (LOCATED AT FRONT YARD)

project data

PROJECT NAME:
HELIOTROPE DUPLEX
407 HELIOTROPE AVENUE
CORONA DEL MAR, CALIFORNIA 92625

PROJECT DESCRIPTION:
DEMOLITION OF EXISTING DUPLEX RESIDENCE; PROJECT TO CONSIST OF A NEW DUPLEX RESIDENCE WITH UNIT 'A' BEING 2,741 S.F. LIVABLE WITH 249 S.F. ATTACHED, 1 CAR GARAGE AND HAVE 3 BEDROOMS, 3-1/2 BATHS
UNIT 'B' SHALL BE 1,737 S.F. LIVABLE WITH 230 S.F ATTACHED 1 CAR GARAGE AND HAVE 3 BEDROOMS, 3-1/2 BATHS

APPLICABLE CODES:
2022 CALIFORNIA RESIDENTIAL CODE
2022 CALIFORNIA BUILDING CODE
2022 CALIFORNIA MECHANICAL CODE
2022 CALIFORNIA PLUMBING CODE
2022 CALIFORNIA ELECTRICAL CODE
2022 CALIFORNIA ENERGY CODE (TITLE-24)
2022 CALIFORNIA GREEN BUILDING STANDARDS CODE

CONSTRUCTION TYPE:
TYPE V-B (NFPA-13D)

OCCUPANCY GROUP:
R3
U (ATTACHED GARAGE)

ZONING:
R-2 TWO-UNIT RESIDENTIAL

ASSESSOR'S PARCEL NO.:
A.P.N.: 459-172-14

PARKING REQUIREMENTS:
2 COVERED PARKING SPACES PROVIDED FOR EACH UNIT
(4 TOTAL SPACES); 1 CARPORT AND ONE ENCLOSED SPACE PER UNIT

sheet index

	COVER SHEET
A0.0	SITE/ROOF PLAN + PROJECT DATA
A0.1	TITLE-24 ENERGY CALCULATIONS – UNIT 'A'
A0.2	TITLE-24 ENERGY CALCULATIONS – UNIT 'A'
A0.3	T24 RESIDENTIAL MEASURES SUMMARY – UNIT 'A'
A0.4	TITLE-24 ENERGY CALCULATIONS – UNIT 'B'
A0.5	TITLE-24 ENERGY CALCULATIONS – UNIT 'B'
A0.6	T24 RESIDENTIAL MEASURES SUMMARY – UNIT 'B'
A0.7	1st + 2nd FLOOR AREA ANALYSIS
A0.8	3rd + ROOF FLOOR AREA ANALYSIS
A0.9	N.B. CONSTRUCTION MINIMUM REQUIREMENTS
A0.10	CAL GREEN RESIDENTIAL MANADATORY MEASURES
CS1.0	TOPOGRAPHIC SURVEY
C-1	PRECISE GRADING PLAN TITLE SHEET
C-2	PRECISE GRADING & DRAINAGE PLAN
C-3	EROSION CONTROL PLAN
C-4	GRADING SECTIONS AND DETAILS
C-5	SOIL REPORT RECOMMENDATIONS
D1.0	DEMOLITION PLAN
D1.1	ROOF OVERLAY PLAN
A1.0	1st FLOOR PLAN
A1.1	2nd FLOOR PLAN
A1.2	3rd FLOOR PLAN
A1.3	ROOF PLAN
A1.4	WALKWAY/PLANTER PLAN
A2.0	1st+2nd FLOOR REFLECTED CEILING PLANS
A2.1	3rd FLOOR REFLECTED CEILING PLAN
A3.0	EXTERIOR ELEVATIONS
A3.1	EXTERIOR ELEVATIONS
A4.0	BUILDING SECTIONS
A4.1	BUILDING SECTIONS
A5.0	DOOR SCHEDULE
A5.1	WINDOW SCHEDULE
A6.0	DETAILS
A6.1	DETAILS
A6.2	DETAILS
S0.1	GENERAL STRUCTURAL NOTES
S0.2	GENERAL STRUCTURAL NOTES
S0.2.1	GENERAL STRUCTURAL NOTES
S0.3	SCHEDULES AND NOTES
S0.4	TYPICAL DETAILS
S0.5	TYPICAL DETAILS
S0.6	TYPICAL DETAILS
S1.1	SITE WALL PLAN
S1.2	FOUNDATION PLAN
S2.1	2nd FLOOR FRAMING PLAN
S2.2	3rd FLOOR + LOW WALL FRAMING PLAN
S2.3	ROOF FRAMING PLAN
S3.1	FOUNDATION DETAILS
S3.2	FOUNDATION DETAILS
S3.3	FOUNDATION DETAILS
S3.4	FOUNDATION DETAILS
S3.5	FOUNDATION SECTIONS
S4.1	FLOOR FRAMING DETAILS
S4.2	FLOOR FRAMING DETAILS
S4.3	FLOOR FRAMING DETAILS
S4.4	FLOOR FRAMING DETAILS
S4.5	FLOOR FRAMING DETAILS
S4.6	FLOOR FRAMING DETAILS
S4.7	FLOOR FRAMING DETAILS
S5.1	ROOF FRAMING DETAILS
S5.2	ROOF FRAMING DETAILS
S6.1	MOMENT FRAME ELEVATIONS
P1.0	1st FLOOR SCHEMATIC PLUMBING PLAN
P1.1	2nd+3rd FLOOR SCHEMATIC PLUMBING PLANS
E1.0	1st+2nd FLOOR SCHEMATIC ELECTRICAL PLANS
E1.1	3rd FLOOR SCHEMATIC ELECTRICAL PLAN
L1.0	LANDSCAPE PLAN

a0.0

site plan + project data
3/16"=1'-0"

heliotrope duplex

407 heliotrope avenue
corona del mar, california
92625

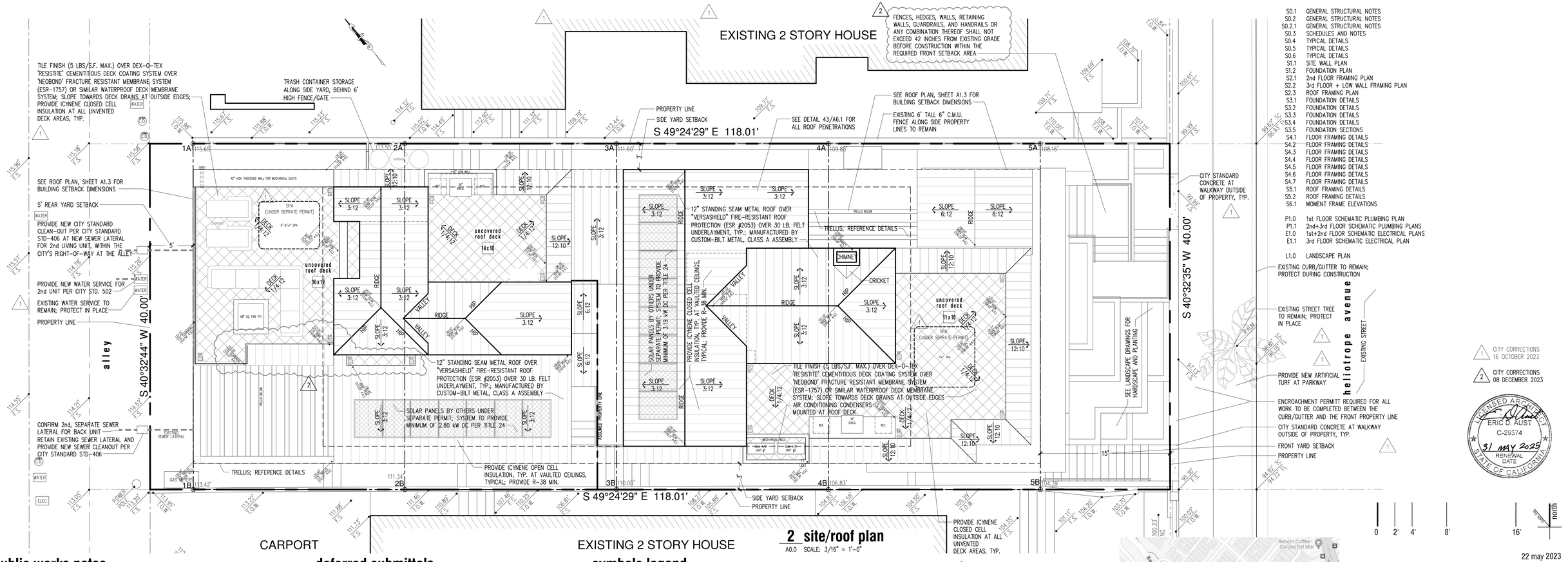

2 site/roof plan
A0.0 SCALE: 3/16" = 1'-0"

public works notes

1. AN APPROVED ENCROACHMENT PERMIT IS REQUIRED FOR ALL WORK ACTIVITIES WITHIN THE PUBLIC RIGHT-OF-WAY
2. AN ENCROACHMENT AGREEMENT IS REQUIRED FOR ALL NON-STANDARD PRIVATE IMPROVEMENTS WITHIN THE PUBLIC RIGHT-OF-WAY. ALL NON-STANDARD IMPROVEMENTS SHALL COMPLY WITH CITY COUNCIL POLICY L-6
3. A PUBLIC WORKS DEPARTMENT ENCROACHMENT PERMIT INSPECTION IS REQUIRED BEFORE THE BUILDING DEPARTMENT PERMIT FINAL CAN BE ISSUED. AT THE TIME OF PUBLIC WORKS DEPARTMENT INSPECTION, IF ANY OF THE EXISTING PUBLIC IMPROVEMENTS SURROUNDING THE SITE IS DAMAGED BY THE PRIVATE WORK, NEW CONCRETE SIDEWALK, CURB AND GUTTER, AND ALLEY/STREET PAVEMENT WILL BE REQUIRED. ADDITIONALLY, IF EXISTING UTILITIES INFRASTRUCTURE ARE DEEMED SUBSTANDARD, A NEW 1-INCH WATER SERVICE, WATER METER BOX, SEWER LATERAL AND/OR CLEANOUT WITH BOX AND LID WILL BE REQUIRED. 100% OF THE COST SHALL BE BORNE BY THE PROPERTY OWNER (MUNICIPAL CODES 14.24.020 AND 14.08.030). SAID DETERMINATION AND THE EXTENT OF THE REPAIR WORK SHALL BE MADE AT THE DISCRETION OF THE PUBLIC WORKS INSPECTOR. CONTRACTOR IS RESPONSIBLE TO MAINTAIN THE PUBLIC RIGHT-OF-WAY AT ALL TIMES DURING THE CONSTRUCTION PROJECT. A STOP WORK NOTICE MAY BE ISSUED FOR ANY DAMAGE OR UNMAINTAINED PORTION OF THE PUBLIC RIGHT-OF-WAY.
4. ALL WORK RELATED TO WATER IN THE PUBLIC RIGHT-OF-WAY SHALL BE PERFORMED BY A C-34 LICENSED PIPELINE CONTRACTOR OR AN 'A' LICENSED GENERAL ENGINEERING CONTRACTOR.
5. ALL WORK RELATED TO WASTEWATER IN THE PUBLIC RIGHT-OF-WAY SHALL BE PERFORMED BY A C-42 LICENSED SANITATION SEWER CONTRACTOR OR AN 'A' LICENSED GENERAL ENGINEERING CONTRACTOR.

deferred submittals

THE FOLLOWING PLANS WILL BE SUBMITTED BY OTHERS UNDER SEPARATE PERMIT; ARCHITECT + ENGINEER OF RECORD TO REVIEW, CERTIFY AND APPROVE DRAWINGS PRIOR TO SUBMITTAL:
- FIRE SPRINKLER DRAWINGS (SPRINKLERS SHALL COMPLY WITH NFPA 13D)
  (*OBTAIN FIRE SPINKLER PERMIT PRIOR TO CALLING FOR ROOF SHEATHING INSPECTION)
  (**SUBMIT A REFLECTED CEILING PLAN WITH FIRE SPRINKLER PERMIT TO ENSURE AGAINST OBSTRUCTIONS OF SPRINKLER HEADS
- AIR CONDITIONING CONDENSER SOUND ATTENUATION DESIGN; CONTRACTOR SHALL DETERMINE EXACT CONDENSER SPECIFICATION AND PROVIDE SOUND LEVEL DATA PER CITY REQUIREMENTS. CONDENSERS SHALL BE LOCATED ON THE ROOF WITHIN THE MECHANICAL WELL
- SOLAR SYSTEM BY OTHERS UNDER SEPARATE PLAN REVIEW AND PERMIT; SYSTEM SHALL HAVE MINIMUM CAPACITY OF 3.19 kWdc (UNIT 'A') 2.80 kWdc (UNIT 'B')
- POOLS, SPAS, WALLS, FENCES, PATIO COVERS, AND OTHER FREE-STANDING STRUCTURES REQUIRE SEPARATE REVIEWS AND PERMITS

2

symbols legend

BUILDING ELEVATION REF. SHEETS A3.0+A3.1 — X / A3.0
ELEVATION MARK — ELEVATION INFO
DETAIL MARK — X / A6.0
GLASS ELEVATION REF. SHEET A5.1 — A
DOOR NUMBER REF. SHEET A5.0 — 01

project consultants

PROPERTY OWNER:
JRC REAL ESTATE DEVELOPMENT
14930 ALONDRA BLVD.
LA MIRADA, CA 90638
TEL 562.623.9328

ENERGY CALCULATIONS:
ALLIANCE 24 TITLE
325 BERRY STREET, UNIT #624
SAN FRANCISCO, CA 94158
TEL 530.753.7510

CIVIL ENGINEER:
TOAL ENGINEERING, INC.
139 AVENIDA NAVARRO
SAN CLEMENTE, CA 92672
TEL 949.492.8586

ARCHITECT:
ERIC AUST ARCHITECT
62 BALBOA COVES
NEWPORT BEACH, CA 92663
TEL 949.637.5220

STRUCTURAL ENGINEER:
WRIGHT ENGINEERS
CONTACT: RACHEL OLSON
2 VENTURE
IRVINE, CA 92618
TEL 949.477.4001

GEOTECHNICAL ENGINEER:
R McCARTHY CONSULTING, INC.
CONTACT: ROBERT McCARTHY
23 CORPORATE PLAZA, SUITE 150
NEWPORT BEACH, CA 92660
TEL 949.629.2539

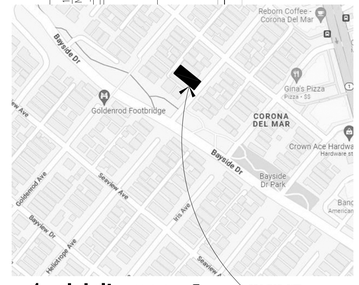

1 vicinity map
A0.0 NOT TO SCALE

1 CITY CORRECTIONS 16 OCTOBER 2023
2 CITY CORRECTIONS 08 DECEMBER 2023

LICENSED ARCHITECT
ERIC D. AUST
C-29374
31 MAY 2025
RENEWAL DATE
STATE OF CALIFORNIA

22 may 2023
© copyright 2023
job #2117

eric aust architect
62 balboa coves
newport beach, california 92663
tel 949.637.5220

client:
JRC real estate development
14930 alondra blvd.
la mirada, california 90638
tel 562.623.9328

GENERAL INFORMATION

01	Project Name	Heliotrope Duplex-Unit A Residence			
02	Run Title	Title 24 Analysis			
03	Project Location	407 Heliotrope Ave. Unit #A			
04	City	Corona Del Mar	05	Standards Version	2022
06	Zip code	92625	07	Software Version	EnergyPro 9.1
08	Climate Zone	6	09	Front Orientation (deg/ Cardinal)	225
10	Building Type	Single family	11	Number of Dwelling Units	1
12	Project Scope	Newly Constructed	13	Number of Bedrooms	3
14	Addition Cond. Floor Area (ft^2)	0	15	Number of Stories	3
16	Existing Cond. Floor Area (ft^2)	n/a	17	Fenestration Average U-factor	0.3
18	Total Cond. Floor Area (ft^2)	2741	19	Glazing Percentage (%)	35.80%
20	ADU Bedroom Count	n/a			

COMPLIANCE RESULTS

01	Building Complies with Computer Performance
02	This building incorporates features that require field testing and/or verification by a certified HERS rater under the supervision of a CEC-approved HERS provider.
03	This building incorporates one or more Special Features shown below

ENERGY DESIGN RATINGS

	Energy Design Ratings			Compliance Margins		
	Source Energy (EDR1)	Efficiency[1] EDR (EDR2efficiency)	Total[2] EDR (EDR2total)	Source Energy (EDR1)	Efficiency[1] EDR (EDR2efficiency)	Total[2] EDR (EDR2total)
Standard Design	37.9	39.8	31.2			
Proposed Design	26.4	22.1	17.5	11.5	17.7	13.7
RESULT[3]: PASS						

[1]Efficiency EDR includes improvements like a better building envelope and more efficient equipment
[2]Total EDR includes efficiency and demand response measures such as photovoltaic (PV) system and batteries
[3]Building complies when source energy, efficiency and total compliance margins are greater than or equal to zero and unmet load hour limits are not exceeded

- Standard Design PV Capacity: 2.62 kWdc
- Proposed PV system downsized to 3.19 kWdc (a factor of 0.010) due to cap of 1 x proposed design electricity use

ENERGY USE SUMMARY

Energy Use	Standard Design Source Energy (EDR1) (kBtu/ft^2 -yr)	Standard Design TDV Energy (EDR2) (kTDV/ft^2 -yr)	Proposed Design Source Energy (EDR1) (kBtu/ft^2 -yr)	Proposed Design TDV Energy (EDR2) (kTDV/ft^2 -yr)	Compliance Margin (EDR1)	Compliance Margin (EDR2)
Space Heating	3.03	20.52	1.27	9.05	1.76	11.47
Space Cooling	0.15	7.8	0.08	4.8	0.07	3
IAQ Ventilation	0.3	3.21	0.3	3.21	0	0
Water Heating	0.92	9.83	0.51	5.87	0.41	3.96
Self Utilization/Flexibility Credit				0		0
Efficiency Compliance Total	**4.4**	**41.36**	**2.16**	**22.93**	**2.24**	**18.43**
Photovoltaics	-1.08	-29.6	-1.44	-37.97		
Battery			0	0		
Flexibility						
Indoor Lighting	0.7	7.09	0.7	7.09		
Appl. & Cooking	2.4	19.49	2.39	19.45		
Plug Loads	2	20.87	2	20.87		
Outdoor Lighting	0.18	1.7	0.18	1.7		
TOTAL COMPLIANCE	**8.6**	**60.91**	**5.99**	**34.07**		

ENERGY USE INTENSITY

	Standard Design (kBtu/ft^2 - yr)	Proposed Design (kBtu/ft^2 - yr)	Compliance Margin (kBtu/ft^2 - yr)	Margin Percentage
Gross EUI[1]	11.24	8.69	2.55	22.69
Net EUI[2]	5.74	1.57	4.17	72.65

Notes
1. Gross EUI is Energy Use Total (not including PV) / Total Building Area.
2. Net EUI is Energy Use Total (including PV) / Total Building Area.

REQUIRED PV SYSTEMS

01	02	03	04	05	06	07	08	09	10	11	12
DC System Size (kWdc)	Exception	Module Type	Array Type	Power Electronics	CFI	Azimuth (deg)	Tilt Input	Array Angle (deg)	Tilt: (x in 12)	Inverter Eff. (%)	Annual Solar Access (%)
3.19	NA	Standard (14-17%)	Fixed	none	false	180	Degrees	30	6.93	96	100

REQUIRED SPECIAL FEATURES

The following are features that must be installed as condition for meeting the modeled energy performance for this computer analysis.

- Window overhangs and/or fins
- Variable capacity heat pump compliance option (verification details from VCHP Staff report, Appendix B, and RA3)
- Northwest Energy Efficiency Alliance (NEEA) rated heat pump water heater; specific brand/model, or equivalent, must be installed

HERS FEATURE SUMMARY

The following is a summary of the features that must be field-verified by a certified HERS Rater as a condition for meeting the modeled energy performance for this computer analysis. Additional detail is provided in the building tables below. Registered CF2Rs and CF3Rs are required to be completed in the HERS Registry

- Quality insulation installation (QII)
- Indoor air quality ventilation
- Kitchen range hood
- Verified SEER/SEER2
- Verified Refrigerant Charge
- Airflow in habitable rooms (SC3.1.4.1.7)
- Minimum Airflow according to RA3.3 and SC3.3.3.4.1
- Verified HSPF
- Verified heat pump rated heating capacity
- CEC certified low-static VCHP system
- Wall-mounted thermostat in zones greater than 150 ft2 (SC3.4.5)
- Verified air filter sizing (SC3.1.4.7)
- Verified air filter pressure drop rating
- Ducts located entirely in conditioned space confirmed by duct leakage testing
- Verified low-leakage ducts in conditioned space must meet maximum 25 cfm leakage to outside (RA3.1.4.3.8)

BUILDING - FEATURES INFORMATION

01	02	03	04	05	06	07
Project Name	Conditioned Floor Area (ft^2)	Number of Dwelling Units	Number of Bedrooms	Number of Zones	Number of Ventilation Cooling Systems	Number of Water Heating Systems
Heliotrope Duplex-Unit A Residence	2741	1	3	3	0	1

ZONE INFORMATION

01	02	03	04	05	06	07
Zone Name	Zone Type	HVAC System Name	Zone Floor Area (ft^2)	Avg. Ceiling Height	Water Heating System 1	Status
1st Floor	Conditioned	HVAC -Heat Pump #11	1331	8.6	DHW Sys 1	New
2nd Floor	Conditioned	HVAC Heat Pump #22	1120	9.4	DHW Sys 1	New
3RD Floor	Conditioned	HVAC Heat Pump #22	290	8	DHW Sys 1	New

OPAQUE SURFACES

01	02	03	04	05	06	07	08
Name	Zone	Construction	Azimuth	Orientation	Gross Area (ft^2)	Window and Door Area (ft2)	Tilt (deg)
SW Wall	1st Floor	R21- Wall-	225	Front	430	67	90
NW Wall	1st Floor	R21- Wall-	315	Left	270	81	90
Back Wall	1st Floor	R21- Wall-	45	Back	478	167.034	90
Right Wall	1st Floor	R21- Wall-	135	Right	335	102.93	90
SW Wall 2	2nd Floor	R21- Wall-	225	Front	442	50	90
NW Wall 2	2nd Floor	R21- Wall-	315	Left	320	20	90
NE Wall	2nd Floor	R21- Wall-	45	Back	442	89	90
SE Wall	2nd Floor	R21- Wall-	135	Right	320	155	90
SW Wall 2x4	3RD Floor	R-13 Wall	225	Front	116	8	90
NW Wall 3	3RD Floor	R21- Wall-	90	n/a	260	29.988	90
NE Wall 2	3RD Floor	R21- Wall-	45	Back	278	126	90
SE Wall 2	3RD Floor	R21- Wall-	135	Right	260	121	90
SW Wall 3	3RD Floor	R21- Wall-	225	Front	116	36	90
Interior Surface	1st Floor>>2nd Floor	R-0 Wall1	n/a	n/a	200	0	n/a
Interior Surface 2	2nd Floor>>1st Floor	R-0 Wall1	n/a	n/a	100	0	n/a
Interior Surface 3	3RD Floor>>2nd Floor	R-0 Wall1	n/a	n/a	100	0	n/a
NW Wall 4	__Garage__	R-0 Wall	315	Left	120	72	90
NE Wall 3	__Garage__	R-0 Wall	45	Back	165	18	90
SW Wall to Garage	__Garage__	R21- Wall-	225	Front	165	0	90
NW Wall To Garage	__Garage__	R21- Wall-	315	Left	170	18	90

OPAQUE SURFACES - CATHEDRAL CEILINGS

01	02	03	04	05	06	07	08	09	10	11
Name	Zone	Construction	Azimuth	Orientation	Area (ft^2)	Skylight Area (ft^2)	Roof Rise (x in 12)	Roof Reflectance	Roof Emittance	Cool Roof
Roof	1st Floor	R-30 Roof Cathedral-	0	n/a	211	0	3	0.1	0.85	No
Ceiling Above	1st Floor	Ceiling Above-	0	n/a	1120	0	0	0.1	0.85	No
Roof Deck	2nd Floor	R-30 Roof Deck	0	n/a	830	0	1	0.1	0.85	No
Ceiling Above 2	2nd Floor	--Ceiling Above-	0	n/a	290	0	0	0.1	0.85	No
Roof-	3RD Floor	R-38 Roof Cathedral	0	n/a	290	0	3	0.1	0.85	No
Ceiling Above 3	__Garage__	-Ceiling Above-	0	n/a	249	0	0	0.1	0.85	No

FENESTRATION / GLAZING

01	02	03	04	05	06	07	08	09	10	11	12	13	14
Name	Type	Surface	Orientation	Azimuth	Width (ft)	Height (ft)	Mult.	Area (ft^2)	U-factor	U-factor Source	SHGC	SHGC Source	Exterior Shading
(2) #C	Window	SW Wall	Front	225			1	34	0.3	NFRC	0.23	NFRC	Bug Screen
#D	Window	SW Wall	Front	225			1	9	0.3	NFRC	0.23	NFRC	Bug Screen
#A	Window	SW Wall	Front	225	3	8	1	24	0.3	NFRC	0.23	NFRC	Bug Screen
#3	Window	NW Wall	Left	315	9	9	1	81	0.3	NFRC	0.23	NFRC	Bug Screen
#E	Window	Back Wall	Back	45			1	7	0.3	NFRC	0.23	NFRC	Bug Screen
#4	Window	Back Wall	Back	45	12.82	9	0	115.03	0.3	NFRC	0.23	NFRC	Bug Screen
#3	Window	Back Wall	Back	45			1	18	0.3	NFRC	0.23	NFRC	Bug Screen
#B	Window	Back Wall	Back	45			1	9	0.3	NFRC	0.23	NFRC	Bug Screen

FENESTRATION / GLAZING

01	02	03	04	05	06	07	08	09	10	11	12	13	14
Name	Type	Surface	Orientation	Azimuth	Width (ft)	Height (ft)	Mult.	Area (ft^2)	U-factor	U-factor Source	SHGC	SHGC Source	Exterior Shading
#02	Window	Right Wall	Right	135	16.8	9	0	47.93	0.3	NFRC	0.23	NFRC	Bug Screen
#J-	Window	Right Wall	Right	135	8	3	0	18	0.3	NFRC	0.23	NFRC	Bug Screen
#E 2	Window	SW Wall 2	Front	225			1	7	0.3	NFRC	0.23	NFRC	Bug Screen
#J 2	Window	SW Wall 2	Front	225			1	18	0.3	NFRC	0.23	NFRC	Bug Screen
#I	Window	SW Wall 2	Front	225			1	25	0.3	NFRC	0.23	NFRC	Bug Screen
#E 3	Window	NW Wall 2	Left	315			1	7	0.3	NFRC	0.23	NFRC	Bug Screen
#H	Window	NW Wall 2	Left	315			1	13	0.3	NFRC	0.23	NFRC	Bug Screen
2XHK	Window	NE Wall	Back	45			1	72	0.3	NFRC	0.23	NFRC	Bug Screen
#C	Window	NE Wall	Back	45			1	17	0.3	NFRC	0.23	NFRC	Bug Screen
#K	Window	SE Wall	Right	135			1	36	0.3	NFRC	0.23	NFRC	Bug Screen
#E 4	Window	SE Wall	Right	135			1	7	0.3	NFRC	0.23	NFRC	Bug Screen
#19	Window	SE Wall	Right	135			1	112	0.3	NFRC	0.23	NFRC	Bug Screen
2XHF	Window	SW Wall 2x4	Front	225			1	8	0.3	NFRC	0.23	NFRC	Bug Screen
3XHQ	Window	NW Wall 3		90	7	3.5	1	29.99	0.3	NFRC	0.23	NFRC	Bug Screen
3XHK	Window	NE Wall 2	Back	45			1	108	0.3	NFRC	0.23	NFRC	Bug Screen
#S	Window	NE Wall 2	Back	45	12	3	0	18	0.3	NFRC	0.23	NFRC	Bug Screen
#K 2	Window	SE Wall 2	Right	135			1	36	0.3	NFRC	0.23	NFRC	Bug Screen
#42	Window	SE Wall 2	Right	135			1	25	0.3	NFRC	0.23	NFRC	Bug Screen

FENESTRATION / GLAZING

01	02	03	04	05	06	07	08	09	10	11	12	13	14
Name	Type	Surface	Orientation	Azimuth	Width (ft)	Height (ft)	Mult.	Area (ft^2)	U-factor	U-factor Source	SHGC	SHGC Source	Exterior Shading
#43	Window	SE Wall 2	Right	135	6	7	1	42	0.3	NFRC	0.23	NFRC	Bug Screen
2XHS	Window	SW Wall 3	Front	225	12	3	1	36	0.3	NFRC	0.23	NFRC	Bug Screen

OPAQUE DOORS

01	02	03	04
Name	Side of Building	Area (ft^2)	U-factor
#06-Door	Back Wall	18	0.102
#01 Main Entry	Right Wall	37	0.2
#44 Door	SE Wall 2	18	0.102
#08 Garage Door	NW Wall 4	72	0.5
#07 Door	NE Wall 3	18	0.102
#16-Door	NW Wall To Garage	18	0.102

OVERHANGS AND FINS

01	02	03	04	05	06	07	08	09	10	11	12	13	14
Window	Overhang					Left Fin				Right Fin			
	Depth	Dist Up	Left Extent	Right Extent	Flap Ht.	Depth	Top Up	Dist L	Bot Up	Depth	Top Up	Dist R	Bot Up
#A	6	0.1	6	6	0	2	0	0.1	0	0	0	0	0
#3	8	0.1	8	8	0	2	0	0.1	0	0	0	0	0
#4	8	0.1	8	8	0	2	0	0.1	0	0	0	0	0
#02	6	0.1	6	6	0	2	0	0.1	0	0	0	0	0
#J-	8	0.1	8	8	0	2	0	0.1	0	0	0	0	0

a0.1

title 24 calculations

heliotrope duplex

407 heliotrope avenue
corona del mar, california
92625

unit 'A'

LICENSED ARCHITECT
ERIC D. AUST
C-29374
31 MAY 2025
RENEWAL DATE
STATE OF CALIFORNIA

22 may 2023
© copyright 2023
job #2117

eric aust
architect
62 balboa coves
newport beach, california 92663
tel 949.637.5220

client:
JRC real estate development
14930 alondra blvd.
la mirada, california 90638
tel 562.623.9328

OVERHANGS AND FINS

01	02	03	04	05	06	07	08	09	10	11	12	13	14
Window	Overhang					Left Fin				Right Fin			
	Depth	Dist Up	Left Extent	Right Extent	Flap Ht.	Depth	Top Up	Dist L	Bot Up	Depth	Top Up	Dist R	Bot Up
3X#Q	11	0.1	2	2	0	2	0	0.1	0	0	0	0	0
#5	6	0.1	6	6	0	2	0	0.1	0	0	0	0	0
#43	10	0.1	2	2	0	2	0	0.1	0	0	0	0	0
2X#5	6	0.1	6	6	0	2	0	0.1	0	0	0	0	0

SLAB FLOORS

01	02	03	04	05	06	07	08
Name	Zone	Area (ft²)	Perimeter (ft)	Edge Insul. R-value and Depth	Edge Insul. R-value and Depth	Carpeted Fraction	Heated
Slab-on-Grade	1st Floor	1331	164	none	0	80%	No
Slab-on-Grade 2	__Garage__	249	65	none	0	0%	No

OPAQUE SURFACE CONSTRUCTIONS

01	02	03	04	05	06	07	08
Construction Name	Surface Type	Construction Type	Framing	Total Cavity R-value	Interior / Exterior Continuous R-value	U-factor	Assembly Layers
R-0 Wall	Exterior Walls	Wood Framed Wall	2x4 @ 16 in. O. C.	R-0	None / None	0.361	Inside Finish: Gypsum Board Cavity / Frame: no insul. / 2x4 Exterior Finish: 3 Coat Stucco
R21 - Wall -	Exterior Walls	Wood Framed Wall	2x6 @ 16 in. O. C.	R-21	None / None	0.066	Inside Finish: Gypsum Board Cavity / Frame: R-21 / 2x6 Exterior Finish: Wood Siding/sheathing/decking

OPAQUE SURFACE CONSTRUCTIONS

01	02	03	04	05	06	07	08
Construction Name	Surface Type	Construction Type	Framing	Total Cavity R-value	Interior / Exterior Continuous R-value	U-factor	Assembly Layers
R-13 Wall	Exterior Walls	Wood Framed Wall	2x4 @ 16 in. O. C.	R-13	None / None	0.095	Inside Finish: Gypsum Board Cavity / Frame: R-13 / 2x4 Exterior Finish: Wood Siding/sheathing/decking
-Ceiling Above-	Cathedral Ceilings	Wood Framed Ceiling	2x6 @ 16 in. O. C.	R-19	None / None	0.058	Roofing: Light Roof (Asphalt Shingle) Roof Deck: Wood Siding/sheathing/decking Cavity / Frame: R-19 in 5-1/2 in. (R-18) / 2x6 Inside Finish: Gypsum Board
R-30 Roof Cathedral-	Cathedral Ceilings	Wood Framed Ceiling	2x10 @ 16 in. O. C.	R-30	None / None	0.037	Roofing: Light Roof (Asphalt Shingle) Roof Deck: Wood Siding/sheathing/decking Cavity / Frame: R-30 / 2x10 Inside Finish: Gypsum Board
Ceiling Above-	Cathedral Ceilings	Wood Framed Ceiling	2x6 @ 16 in. O. C.	R-19	None / None	0.058	Roofing: Light Roof (Asphalt Shingle) Roof Deck: Wood Siding/sheathing/decking Cavity / Frame: R-19 in 5-1/2 in. (R-18) / 2x6 Inside Finish: Gypsum Board
R-30 Roof Deck	Cathedral Ceilings	Wood Framed Ceiling	2x10 @ 16 in. O. C.	R-30	None / None	0.037	Roofing: Light Roof (Asphalt Shingle) Roof Deck: Wood Siding/sheathing/decking Cavity / Frame: R-30 / 2x10 Inside Finish: Gypsum Board

OPAQUE SURFACE CONSTRUCTIONS

01	02	03	04	05	06	07	08
Construction Name	Surface Type	Construction Type	Framing	Total Cavity R-value	Interior / Exterior Continuous R-value	U-factor	Assembly Layers
--Ceiling Above-	Cathedral Ceilings	Wood Framed Ceiling	2x6 @ 16 in. O. C.	R-19	None / None	0.058	Roofing: Light Roof (Asphalt Shingle) Roof Deck: Wood Siding/sheathing/decking Cavity / Frame: R-19 in 5-1/2 in. (R-18) / 2x6 Inside Finish: Gypsum Board
R-38 Roof Cathedral	Cathedral Ceilings	Wood Framed Ceiling	2x12 @ 16 in. O. C.	R-38	None / None	0.03	Roofing: Light Roof (Asphalt Shingle) Roof Deck: Wood Siding/sheathing/decking Cavity / Frame: R-38 / 2x12 Inside Finish: Gypsum Board
R-0 Wall1	Interior Walls	Wood Framed Wall	2x4 @ 16 in. O. C.	R-0	None / None	0.277	Inside Finish: Gypsum Board Cavity / Frame: no insul. / 2x4 Other Side Finish: Gypsum Board

BUILDING ENVELOPE - HERS VERIFICATION

01	02	03	04	05
Quality Insulation Installation (QII)	High R-value Spray Foam Insulation	Building Envelope Air Leakage	CFM50	CFM50
Required	Not Required	N/A	n/a	n/a

WATER HEATING SYSTEMS

01	02	03	04	05	06	07	08	09
Name	System Type	Distribution Type	Water Heater Name	Number of Units	Solar Heating System	Compact Distribution	HERS Verification	Water Heater Name (#)
DHW Sys 1	Domestic Hot Water (DHW)	Standard	DHW Heater 1	1	n/a	None	n/a	DHW Heater 1 (1)

WATER HEATERS - NEEA HEAT PUMP

01	02	03	04	05	06	07	08
Name	# of Units	Tank Vol. (gal)	NEEA Heat Pump Brand	NEEA Heat Pump Model	Tank Location	Duct Inlet Air Source	Duct Outlet Air Source
DHW Heater 1	1	50	AOSmith	AOSmithHPS105DH4SDV2xx	1st Floor	1st Floor	1st Floor

WATER HEATING - HERS VERIFICATION

01	02	03	04	05	06	07
Name	Pipe Insulation	Parallel Piping	Compact Distribution	Compact Distribution Type	Recirculation Control	Shower Drain Water Heat Recovery
DHW Sys 1 - 1/1	Not Required	Not Required	Not Required	None	Not Required	Not Required

SPACE CONDITIONING SYSTEMS

01	02	03	04	05	06	07	08	09
Name	System Type	Heating Unit Name	Heating Equipment Count	Cooling Unit Name	Cooling Equipment Count	Fan Name	Distribution Name	Required Thermostat Type
HVAC -Heat Pump #11	Heat pump heating cooling	Heat Pump System 1	1	Heat Pump System 1	1	n/a	n/a	Setback
HVAC Heat Pump #22	Heat pump heating cooling	Heat Pump System 2	1	Heat Pump System 2	1	n/a	n/a	Setback

HVAC - HEAT PUMPS

01	02	03	04	05	06	07	08	09	10	11	12	13
Name	System Type	Number of Units	Heating				Cooling			Zonally Controlled	Compressor Type	HERS Verification
			Efficiency Type	HSPF / HSPF2 / COP	Cap 47	Cap 17	Efficiency Type	SEER / SEER2	EER / EER / CEER			
Heat Pump System 1	VCHP-ducted	1	HSPF	10.7	66000	59000	EERSEER	17.8	11.1	Not Zonal	Single Speed	Heat Pump System 1-hers-htpump

HVAC - HEAT PUMPS

01	02	03	04	05	06	07	08	09	10	11	12	13
Name	System Type	Number of Units	Heating				Cooling			Zonally Controlled	Compressor Type	HERS Verification
			Efficiency Type	HSPF / HSPF2 / COP	Cap 47	Cap 17	Efficiency Type	SEER / SEER2	EER / EER / CEER			
Heat Pump System 2	VCHP-ducted	1	HSPF	10.7	66000	59000	EERSEER	17.8	11.1	Not Zonal	Single Speed	Heat Pump System 2-hers-htpump

HVAC HEAT PUMPS - HERS VERIFICATION

01	02	03	04	05	06	07	08	09
Name	Verified Airflow	Airflow Target	Verified EER/EER2	Verified SEER/SEER2	Verified Refrigerant Charge	Verified HSPF/HSPF2	Verified Heating Cap 47	Verified Heating Cap 17
Heat Pump System 1-hers-htpump	Not Required	0	Not Required	Required	Yes	Yes	Yes	Yes
Heat Pump System 2-hers-htpump	Not Required	0	Not Required	Required	Yes	Yes	Yes	Yes

VARIABLE CAPACITY HEAT PUMP COMPLIANCE OPTION - HERS VERIFICATION

01	02	03	04	05	06	07	08	09	10
Name	Certified Low-Static VCHP System	Airflow to Habitable Rooms	Ductless Units in Conditioned Space	Wall Mount Thermostat	Air Filter Sizing & Pressure Drop Rating	Low Leakage Ducts in Conditioned Space	Minimum Airflow per RA3.3 and SC3.3.3.4.1	Certified non-continuous Fan	Indoor Fan not Running Continuously
Heat Pump System 1	Required	Required	Not required	Required	Required	Required	Required	Required	Required
Heat Pump System 2	Required	Required	Not required	Required	Required	Required	Required	Required	Required

INDOOR AIR QUALITY (IAQ) FANS

01	02	03	04	05	06	07	08	09
Dwelling Unit	Airflow (CFM)	Fan Efficacy (W/CFM)	IAQ Fan Type	Includes Heat/Energy Recovery?	IAQ Recovery Effectiveness - SRE	Includes Fault Indicator Display?	HERS Verification	Status
SFam IAQVentRpt	106	0.35	Exhaust	No	n/a	No	Yes	

DOCUMENTATION AUTHOR'S DECLARATION STATEMENT

I, I certify that this Certificate of Compliance documentation is accurate and complete.

Documentation Author Name:	Documentation Author Signature:
Jam Hezar	Jam Hezar
Company:	Signature Date:
Alliance 24 Title	2023-05-02 15:27:00
Address:	CEA/ HERS Certification Identification (If applicable):
325 Berry Street	ICC#8099390 and USGBC-LEED AP BD C
City/State/Zip:	Phone:
San Francisco, CA 94158	415-422-9925

RESPONSIBLE PERSON'S DECLARATION STATEMENT

I certify the following under penalty of perjury, under the laws of the State of California:

1. I am eligible under Division 3 of the Business and Professions Code to accept responsibility for the building design identified on this Certificate of Compliance.
2. I certify that the energy features and performance specifications identified on this Certificate of Compliance conform to the requirements of Title 24, Part 1 and Part 6 of the California Code of Regulations.
3. The building design features or system design features identified on this Certificate of Compliance are consistent with the information provided on other applicable compliance documents, worksheets, calculations, plans and specifications submitted to the enforcement agency for approval with this building permit application.

Responsible Designer Name:	Responsible Designer Signature:
Eric Aust	Eric Aust
Company:	Date Signed:
Eric Aust Architect	2023-05-02 17:02:35
Address:	License:
62 Balboa Coves	C-29374
City/State/Zip:	Phone:
Newport Beach, CA 92663	949-637-5220

Digitally signed by CalCERTS. This digital signature is provided in order to secure the content of this registered document, and in no way implies Registration Provider responsibility for the accuracy of the information.

Easy to Verify at CalCERTS.com

a0.2

title 24 calculations

heliotrope duplex

407 heliotrope avenue
corona del mar, california
92625

unit 'A'

LICENSED ARCHITECT
ERIC D. AUST
C-29374
31 MAY 2025
RENEWAL DATE
STATE OF CALIFORNIA

22 may 2023
© copyright 2023
job #2117

eric aust
architect
62 balboa coves
newport beach, california 92663
tel 949.637.5220

client:
JRC real estate development
14930 alondra blvd.
la mirada, california 90638
tel 562.623.9328

a0.3

title-24 residential mandatory measures summary

heliotrope duplex

407 heliotrope avenue
corona del mar, california
92625

residential mandatory measures summary; page 1

RESIDENTIAL MEASURES SUMMARY					RMS-1
Project Name: Heliotrope Duplex-Unit A Residence	Building Type: ☒ Single Family ☐ Multi Family ☐ Addition Alone ☐ Existing+ Addition/Alteration				Date: 5/2/2023
Project Address: 407 Heliotrope Ave. Unit #A Corona Del M	California Energy Climate Zone: CA Climate Zone 06	Total Cond. Floor Area: 2,741	Addition: n/a		# of Units: 1

INSULATION

Construction	Type	Cavity	Area (ft²)	Special Features	Status
Wall	Wood Framed	R 21	2,906		New
Slab	Unheated Slab-on-Grade	- no insulation	1,331	Perim = 164'	New
Demising	Wood Framed	- no insulation	400		New
Door	Wood Framed	R 13	18		New
Roof	Wood Framed Rafter	R 30	211		New
Door	Opaque Door	R-5	37		New
Roof	Wood Framed Rafter	R 19	1,120		New
Roof	Wood Framed Rafter	R 30	830		New

FENESTRATION Total Area: 980 Glazing Percentage: 35.8% New/Altered Average U-Factor: 0.30

Orientation	Area(ft²)	U-Fac	SHGC	Overhang	Sidefins	Exterior Shades	Status
Front (SW)	101.0	0.300	0.23	none	none	N/A	New
Front (SW)	60.0	0.300	0.23	6.0	2.00/0.00	N/A	New
Left (NW)	81.0	0.300	0.23	8.0	2.00/0.00	N/A	New
Rear (NE)	231.0	0.300	0.23	none	none	N/A	New
Rear (NE)	115.0	0.300	0.23	8.0	2.00/0.00	N/A	New
Right (SE)	48.0	0.300	0.23	6.0	2.00/0.00	N/A	New
Right (SE)	18.0	0.300	0.23	8.0	2.00/0.00	N/A	New
Left (NW)	20.0	0.300	0.23	none	none	N/A	New
Right (SE)	216.0	0.300	0.23	none	none	N/A	New
Rear (E)	30.0	0.300	0.23	11.0	2.00/0.00	N/A	New
Rear (NE)	18.0	0.300	0.23	6.0	2.00/0.00	N/A	New
Right (SE)	42.0	0.300	0.23	10.0	2.00/0.00	N/A	New

HVAC SYSTEMS

Qty.	Heating	Min. Eff	Cooling	Min. Eff	Thermostat	Status
1	Electric Heat Pump	10.70 HSPF	Split Heat Pump	17.8 SEER	Setback	New
1	Electric Heat Pump	10.70 HSPF	Split Heat Pump	17.8 SEER	Setback	New

HVAC DISTRIBUTION

Location	Heating	Cooling	Duct Location	Duct R-Value	Status
HVAC -Heat Pump #1	Ducted	Ducted	Conditioned	6.0	New
HVAC Heat Pump #2	Ducted	Ducted	Conditioned	6.0	New

WATER HEATING

Qty.	Type	Gallons	Min. Eff	Distribution	Status
1	Heat Pump	50	3.80	Standard	New

EnergyPro 9.1 by EnergySoft User Number: 6262 ID: 23-05101 Page 19 of 27

residential mandatory measures summary; page 2

RESIDENTIAL MEASURES SUMMARY					RMS-1
Project Name: Heliotrope Duplex-Unit A Residence	Building Type: ☒ Single Family ☐ Multi Family ☐ Addition Alone ☐ Existing+ Addition/Alteration				Date: 5/2/2023
Project Address: 407 Heliotrope Ave. Unit #A Corona Del M	California Energy Climate Zone: CA Climate Zone 06	Total Cond. Floor Area: 2,741	Addition: n/a		# of Units: 1

INSULATION

Construction	Type	Cavity	Area (ft²)	Special Features	Status
Roof	Wood Framed Rafter	R 19	290		New
Wall	Wood Framed	R 13	108		New
Roof	Wood Framed Rafter	R 38	290		New
Door	Wood Framed	R 13	18		New

FENESTRATION Total Area: 980 Glazing Percentage: 35.8% New/Altered Average U-Factor: 0.30

Orientation	Area(ft²)	U-Fac	SHGC	Overhang	Sidefins	Exterior Shades	Status

HVAC SYSTEMS

Qty.	Heating	Min. Eff	Cooling	Min. Eff	Thermostat	Status

HVAC DISTRIBUTION

Location	Heating	Cooling	Duct Location	Duct R-Value	Status

WATER HEATING

Qty.	Type	Gallons	Min. Eff	Distribution	Status

EnergyPro 9.1 by EnergySoft User Number: 6262 ID: 23-05101 Page 20 of 27

residential mandatory measures summary; page 3

2022 Single-Family Residential Mandatory Requirements Summary

NOTE: Single-family residential buildings subject to the Energy Codes must comply with all applicable mandatory measures, regardless of the compliance approach used. Review the respective section for more information.
(04/2022)

Building Envelope:

§ 110.6(a)1:	**Air Leakage.** Manufactured fenestration, exterior doors, and exterior pet doors must limit air leakage to 0.3 CFM per square foot or less when tested per NFRC-400, ASTM E283, or AAMA/WDMA/CSA 101/I.S.2/A440-2011. *
§ 110.6(a)5:	**Labeling.** Fenestration products and exterior doors must have a label meeting the requirements of § 10-111(a).
§ 110.6(b):	**Field fabricated exterior doors and fenestration** products must use U-factors and solar heat gain coefficient (SHGC) values from Tables 110.6-A, 110.6-B, or JA4.5 for exterior doors. They must be caulked and/or weather-stripped. *
§ 110.7:	**Air Leakage.** All joints, penetrations, and other openings in the building envelope that are potential sources of air leakage must be caulked, gasketed, or weather stripped.
§ 110.8(a):	**Insulation Certification by Manufacturers.** Insulation must be certified by the Department of Consumer Affairs, Bureau of Household Goods and Services (BHGS).
§ 110.8(g):	**Insulation Requirements for Heated Slab Floors.** Heated slab floors must be insulated per the requirements of § 110.8(g).
§ 110.8(i):	**Roofing Products Solar Reflectance and Thermal Emittance.** The thermal emittance and aged solar reflectance values of the roofing material must meet the requirements of § 110.8(i) and be labeled per §10-113 when the installation of a cool roof is specified on the CF1R.
§ 110.8(j):	**Radiant Barrier.** When required, radiant barriers must have an emittance of 0.05 or less and be certified to the Department of Consumer Affairs.
§ 150.0(a):	**Roof Deck, Ceiling and Rafter Roof Insulation.** Roof decks in newly constructed attics in climate zones 4 and 8-16 area-weighted average U-factor not exceeding U-0.184. Ceiling and rafter roofs minimum R-22 insulation in wood-frame ceiling; or area-weighted average U-factor must not exceed 0.043. Rafter roof alterations minimum R-19 or area-weighted average U-factor of 0.054 or less. Attic access doors must have permanently attached insulation using adhesive or mechanical fasteners. The attic access must be gasketed to prevent air leakage. Insulation must be installed in direct contact with a roof or ceiling which is sealed to limit infiltration and exfiltration as specified in § 110.7, including but not limited to placing insulation either above or below the roof deck or on top of a drywall ceiling. *
§ 150.0(b):	**Loose-fill Insulation.** Loose fill insulation must meet the manufacturer's required density for the labeled R-value.
§ 150.0(c):	**Wall Insulation.** Minimum R-13 insulation in 2x4 inch wood framing wall or have a U-factor of 0.102 or less, or R-20 in 2x6 inch wood framing or have a U-factor of 0.071 or less. Opaque non-framed assemblies must have an overall assembly U-factor not exceeding 0.102. Masonry walls must meet Tables 150.1-A or B. *
§ 150.0(d):	**Raised-floor Insulation.** Minimum R-19 insulation in raised wood framed floor or 0.037 maximum U-factor. *
§ 150.0(f):	**Slab Edge Insulation.** Slab edge insulation must meet all of the following: have a water absorption rate, for the insulation material alone without facings, no greater than 0.3 percent; have a water vapor permeance no greater than 2.0 perm per inch; be protected from physical damage and UV light deterioration; and, when installed as part of a heated slab floor, meet the requirements of § 110.8(g).
§ 150.0(g)1:	**Vapor Retarder.** In climate zones 1 through 16, the earth floor of unvented crawl space must be covered with a Class I or Class II vapor retarder. This requirement also applies to controlled ventilation crawl space for buildings complying with the exception to §150.0(d).
§ 150.0(g)2:	**Vapor Retarder.** In climate zones 14 and 16, a Class I or Class II vapor retarder must be installed on the conditioned space side of all insulation in all exterior walls, vented attics, and unvented attics with air-permeable insulation.
§ 150.0(q):	**Fenestration Products.** Fenestration, including skylights, separating conditioned space from unconditioned space or outdoors must have a maximum U-factor of 0.45; or area-weighted average U-factor of all fenestration must not exceed 0.45. *

Fireplaces, Decorative Gas Appliances, and Gas Log:

§ 110.5(e)	**Pilot Light.** Continuously burning pilot lights are not allowed for indoor and outdoor fireplaces.
§ 150.0(e)1:	**Closable Doors.** Masonry or factory-built fireplaces must have a closable metal or glass door covering the entire opening of the firebox.
§ 150.0(e)2:	**Combustion Intake.** Masonry or factory-built fireplaces must have a combustion outside air intake, which is at least six square inches in area and is equipped with a readily accessible, operable, and tight-fitting damper or combustion-air control device. *
§ 150.0(e)3:	**Flue Damper.** Masonry or factory-built fireplaces must have a flue damper with a readily accessible control. *

Space Conditioning, Water Heating, and Plumbing System:

§ 110.0-§ 110.3:	**Certification.** Heating, ventilation, and air conditioning (HVAC) equipment, water heaters, showerheads, faucets, and all other regulated appliances must be certified by the manufacturer to the California Energy Commission. *
§ 110.2(a):	**HVAC Efficiency.** Equipment must meet the applicable efficiency requirements in Table 110.2-A through Table 110.2-N. *
§ 110.2(b):	**Controls for Heat Pumps with Supplementary Electric Resistance Heaters.** Heat pumps with supplementary electric resistance heaters must have controls that prevent supplementary heater operation when the heating load can be met by the heat pump alone; and in which the cut-on temperature for compression heating is higher than the cut-on temperature for supplementary heating, and the cut-off temperature for compression heating is higher than the cut-off temperature for supplementary heating. *
§ 110.2(c):	**Thermostats.** All heating or cooling systems not controlled by a central energy management control system (EMCS) must have a setback thermostat. *
§ 110.3(c)3:	**Insulation.** Unfired service water heater storage tanks and solar water-heating backup tanks must have adequate insulation, or tank surface heat loss rating.
§ 110.3(c)6:	**Isolation Valves.** Instantaneous water heaters with an input rating greater than 6.8 kBtu per hour (2 kW) must have isolation valves with hose bibbs or other fittings on both cold and hot water lines to allow for flushing the water heater when the valves are closed.

5/6/22

residential mandatory measures summary; page 4

2022 Single-Family Residential Mandatory Requirements Summary

§ 110.5:	**Pilot Lights.** Continuously burning pilot lights are prohibited for natural gas: fan-type central furnaces; household cooking appliances (except appliances without an electrical supply voltage connection with pilot lights that consume less than 150 Btu per hour); and pool and spa heaters. *
§ 150.0(h)1:	**Building Cooling and Heating Loads.** Heating and/or cooling loads are calculated in accordance with the ASHRAE Handbook, Equipment Volume, Applications Volume, and Fundamentals Volume; the SMACNA Residential Comfort System Installation Standards Manual; or the ACCA Manual J using design conditions specified in § 150.0(h)2.
§ 150.0(h)3A:	**Clearances.** Air conditioner and heat pump outdoor condensing units must have a clearance of at least five feet from the outlet of any dryer.
§ 150.0(h)3B:	**Liquid Line Drier.** Air conditioners and heat pump systems must be equipped with liquid line filter driers if required, as specified by the manufacturer's instructions.
§ 150.0(j)1:	**Water Piping, Solar Water-heating System Piping, and Space Conditioning System Line Insulation.** All domestic hot water piping must be insulated as specified in § 609.11 of the California Plumbing Code. *
§ 150.0(j)2:	**Insulation Protection.** Piping insulation must be protected from damage, including that due to sunlight, moisture, equipment maintenance, and wind as required by §120.3(b). Insulation exposed to weather must be water retardant and protected from UV light (no adhesive tapes). Insulation covering chilled water piping and refrigerant suction piping located outside the conditioned space must include, or be protected by, a Class I or Class II vapor retarder. Pipe insulation buried below grade must be installed in a waterproof and non-crushable casing or sleeve.
§ 150.0(n)1:	**Gas or Propane Water Heating Systems.** Systems using gas or propane water heaters to serve individual dwelling units must designate a space at least 2.5' x 2.5' x 7' suitable for the future installation of a heat pump water heater, and meet electrical and plumbing requirements, based on the distance between this designated space and the water heater location; and a condensate drain no more than 2" higher than the base of the water heater
§ 150.0(n)3:	**Solar Water-heating Systems.** Solar water-heating systems and collectors must be certified and rated by the Solar Rating and Certification Corporation (SRCC), the International Association of Plumbing and Mechanical Officials, Research and Testing (IAPMO R&T), or by a listing agency that is approved by the executive director.

Ducts and Fans:

§ 110.8(d)3:	**Ducts.** Insulation installed on an existing space-conditioning duct must comply with § 604.0 of the California Mechanical Code (CMC). If a contractor installs the insulation, the contractor must certify to the customer, in writing, that the insulation meets this requirement.
§ 150.0(m)1:	**CMC Compliance.** All air-distribution system ducts and plenums must meet CMC §§ 601.0-605.0 and ANSI/SMACNA-006-2006 HVAC Duct Construction Standards Metal and Flexible 3rd Edition. Portions of supply-air and return-air ducts and plenums must be insulated to R-6.0 or higher; ducts located entirely in conditioned space as confirmed through field verification and diagnostic testing (RA3.1.4.3.8) do not require insulation. Connections of metal ducts and inner core of flexible ducts must be mechanically fastened. Openings must be sealed with mastic, tape, or other duct-closure system that meets the applicable UL requirements, or aerosol sealant that meets UL 723. The combination of mastic and either mesh or tape must be used to seal openings greater than ¼", if mastic or tape is used. Building cavities, air handler support platforms, and plenums designed or constructed with materials other than sealed sheet metal, duct board or flexible duct must not be used to convey conditioned air. Building cavities and support platforms may contain ducts; ducts installed in these spaces must not be compressed. *
§ 150.0(m)2:	**Factory-Fabricated Duct Systems.** Factory-fabricated duct systems must comply with applicable requirements for duct construction, connections, and closures; joints and seams of duct systems and their components must not be sealed with cloth back rubber adhesive duct tapes unless such tape is used in combination with mastic and draw bands.
§ 150.0(m)3:	**Field-Fabricated Duct Systems.** Field-fabricated duct systems must comply with applicable requirements for: pressure-sensitive tapes, mastics, sealants, and other requirements specified for duct construction.
§ 150.0(m)7:	**Backdraft Damper.** Fan systems that exchange air between the conditioned space and outdoors must have backdraft or automatic dampers.
§ 150.0(m)8:	**Gravity Ventilation Dampers.** Gravity ventilating systems serving conditioned space must have either automatic or readily accessible, manually operated dampers in all openings to the outside, except combustion inlet and outlet air openings and elevator shaft vents.
§ 150.0(m)9:	**Protection of Insulation.** Insulation must be protected from damage due tosunlight, moisture, equipment maintenance, and wind. Insulation exposed to weather must be suitable for outdoor service (e.g., protected by aluminum, sheet metal, painted canvas, or plastic cover). Cellular foam insulation must be protected as above or painted with a water retardant and solar radiation-resistant coating.
§ 150.0(m)10:	**Porous Inner Core Flex Duct.** Porous inner cores of flex ducts must have a non-porous layer or air barrier between the inner core and outer vapor barrier.
§ 150.0(m)11:	**Duct System Sealing and Leakage Test.** When space conditioning systems use forced air duct systems to supply conditioned air to an occupiable space, the ducts must be sealed and duct leakage tested, as confirmed through field verification and diagnostic testing, in accordance with Reference Residential Appendix RA3.1.
§ 150.0(m)12:	**Air Filtration.** Space conditioning systems with ducts exceeding 10 feet and the supply side of ventilation systems must have MERV 13 or equivalent filters. Filters for space conditioning systems must have a two inch depth or can be one inch if sized per Equation 150.0-A. Clean-filter pressure drop and labeling must meet the requirements in §150.0(m)12. Filters must be accessible for regular service. Filter racks or grilles must use gaskets, sealing, or other means to close gaps around the inserted filters to and prevents air from bypassing the filter. *

5/6/22

residential mandatory measures summary; page 5

2022 Single-Family Residential Mandatory Requirements Summary

§ 150.0(m)13:	**Space Conditioning System Airflow Rate and Fan Efficacy.** Space conditioning systems that use ducts to supply cooling must have a hole for the placement of a static pressure probe, or a permanently installed static pressure probe in the supply plenum. Airflow must be ≥ 350 CFM per ton of nominal cooling capacity, and an air-handling unit fan efficacy ≤ 0.45 watts per CFM for gas furnace air handlers and ≤ 0.58 watts per CFM for all others. Small duct high velocity systems must provide an airflow ≥ 250 CFM per ton of nominal cooling capacity, and an air-handling unit fan efficacy ≤ 0.62 watts per CFM. Field verification testing is required in accordance with Reference Residential Appendix RA3.3. *

Ventilation and Indoor Air Quality:

§ 150.0(o)1:	**Requirements for Ventilation and Indoor Air Quality.** All dwelling units must meet the requirements of ASHRAE Standard 62.2, Ventilation and Acceptable Indoor Air Quality in Residential Buildings subject to the amendments specified in § 150.0(o)1. *
§ 150.0(o)1B:	**Central Fan Integrated (CFI) Ventilation Systems.** Continuous operation of CFI air handlers is not allowed to provide the whole-dwelling unit ventilation airflow required per §150.0(o)1C. A motorized damper(s) must be installed on the ventilation duct(s) that prevents all airflow through the space conditioning duct system when the damper(s) is closed andcontrolled per §150.0(o)1Biii&iv. CFI ventilation systems must have controls that track outdoor air ventilation run time, and either open or close the motorized damper(s) for compliance with §150.0(o)1C.
§ 150.0(o)1C:	**Whole-Dwelling Unit Mechanical Ventilation for Single-Family Detached and townhouses .** Single-family detached dwelling units, and attached dwelling units not sharing ceilings or floors with other dwelling units, occupiable spaces, public garages, or commercial spaces must have mechanical ventilation airflow specified in § 150.0(o)1Ci-iii.
§ 150.0(o)1G:	**Local Mechanical Exhaust.** Kitchens and bathrooms must have local mechanical exhaust; nonenclosed kitchens must have demand-controlled exhaust system meeting requirements of §150.0(o)1Giii,enclosed kitchens and bathrooms can use demand-controlled or continuous exhaust meeting §150.0(o)1Gii-iv. Airflow must be measured by the installer per §150.0(o)1Gv, and rated for sound per §150.0(o)1Gvi. *
§ 150.0(o)1H&I:	**Airflow Measurement and Sound Ratings of Whole-Dwelling Unit Ventilation Systems.** The airflow required per § 150.0(o)1C must be measured by using a flow hood, flow grid, or other airflow measuring device at the fan's inlet or outlet terminals/grilles per Reference Residential Appendix RA3.7. Whole-Dwelling unit ventilation systems must be rated for sound per ASHRAE 62.2 §7.2 at no less than the minimum airflow rate required by §150.0(o)1C.
§ 150.0(o)2:	**Field Verification and Diagnostic Testing.** Whole-Dwelling Unit ventilation airflow, vented range hood airflow and sound rating, and HRV and ERV fan efficacy must be verified in accordance with Reference Residential Appendix RA3.7. Vented range hoods must be verified per Reference Residential Appendix RA3.7.4.3 to confirm if it is rated by HVI or AHAM to comply with the airflow rates and sound requirements per §150.0(o)1G

Pool and Spa Systems and Equipment:

§ 110.4(a):	**Certification by Manufacturers.** Any pool or spa heating system or equipment must be certified to have all of the following: compliance with the Appliance Efficiency Regulations and listing in MAEDbS; an on-off switch mounted outside of the heater that allows shutting off the heater without adjusting the thermostat setting; a permanent weatherproof plate or card with operating instructions; and must not use electric resistance heating. *
§ 110.4(b)1:	**Piping.** Any pool or spa heating system or equipment must be installed with at least 36 inches of pipe between the filter and the heater, or dedicated suction and return lines, or built-in or built-up connections to allow for future solar heating.
§ 110.4(b)2:	**Covers.** Outdoor pools or spas that have a heat pump or gas heater must have a cover.
§ 110.4(b)3:	**Directional Inlets and Time Switches for Pools.** Pools must have directional inlets that adequately mix the pool water, and a time switch that will allow all pumps to be set or programmed to run only during off-peak electric demand periods.
§ 110.5:	**Pilot Light.** Natural gas pool and spa heaters must not have a continuously burning pilot light.
§ 150.0(p):	**Pool Systems and Equipment Installation.** Residential pool systems or equipment must meet the specified requirements for pump sizing, flow rate, piping, filters, and valves. *

Lighting:

§ 110.9:	**Lighting Controls and Components.** All lighting control devices and systems, ballasts, and luminaires must meet the applicable requirements of § 110.9. *
§ 150.0(k)1A:	**Luminaire Efficacy.** All installed luminaires must meet the requirements in Table 150.0-A, except lighting integral to exhaust fans, kitchen range hoods, bath vanity mirrors, and garage door openers; navigation lighting less than 5 watts; and lighting internal to drawers, cabinets, and linen closets with an efficacy of at least 45 lumens per watt.
§ 150.0(k)1B:	**Screw based luminaires.** Screw based luminaires must contain lamps that comply with Reference Joint Appendix JA8. *
§ 150.0(k)1C:	**Recessed Downlight Luminaires in Ceilings.** Luminaires recessed into ceilings must not contain screw based sockets, must be airtight, and must be sealed with a gasket or caulk. California Electrical Code § 410.116 must also be met.
§ 150.0(k)1D:	**Light Sources in Enclosed or Recessed Luminaires.** Lamps and other separable light sources that are not compliant with the JA8 elevated temperature requirements, including marking requirements, must not be installed in enclosed or recessed luminaires.
§ 150.0(k)1E:	**Blank Electrical Boxes.** The number of electrical boxes that are more than five feet above the finished floor and do not contain a luminaire or other device shall be no more than the number of bedrooms. These boxes must be served by a dimmer, vacancy sensor control, low voltage wiring, or fan speed control.
§ 150.0(k)1F:	**Lighting Integral to Exhaust Fans.** Lighting integral to exhaust fans (except when installed by the manufacturer in kitchen exhaust hoods) must meet the applicable requirements of § 150.0(k). *

5/6/22

residential mandatory measures summary; page 6

2022 Single-Family Residential Mandatory Requirements Summary

§ 150.0(k)1G:	**Screw based luminaires.** Screw based luminaires must contain lamps that comply with Reference Joint Appendix JA8. *
§ 150.0(k)1H:	**Light Sources in Enclosed or Recessed Luminaires.** Lamps and other separable light sources that are not compliant with the JA8 elevated temperature requirements, including marking requirements, must not be installed in enclosed or recessed luminaires.
§ 150.0(k)1I:	**Light Sources in Drawers, Cabinets, and Linen Closets.** Light sources internal to drawers, cabinetry or linen closets are not required to comply with Table 150.0-A or be controlled by vacancy sensors provided that they are rated to consume no more than 5 watts of power, emit no more than 150 lumens, and are equipped with controls that automatically turn the lighting off when the drawer, cabinet or linen closet is closed.
§ 150.0(k)2A:	**Interior Switches and Controls.** All forward phase cut dimmers used with LED light sources must comply with NEMA SSL 7A.
§ 150.0(k)2B:	**Interior Switches and Controls.** Exhaust fans must be controlled separately from lighting systems. *
§ 150.0(k)2A:	**Accessible Controls.** Lighting must have readily accessible wall-mounted controls that allow the lighting to be manually turned on and off. *
§ 150.0(k)2B:	**Multiple Controls.** Controls must not bypass a dimmer, occupant sensor, or vacancy sensor function if the dimmer or sensor is installed to comply with § 150.0(k).
§ 150.0(k)2C:	**Mandatory Requirements.** Lighting controls must comply with the applicable requirements of § 110.9.
§ 150.0(k)2D:	**Energy Management Control Systems.** An energy management control system (EMCS) may be used to comply with dimming, occupancy, and control requirements if it provides the functionality of the specified control per § 110.9 and the physical controls specified in § 150.0(k)2A.
§ 150.0(k)2E:	**Automatic Shutoff Controls.** In bathrooms, garages, laundry rooms, utility rooms and walk-in closets, at least one installed luminaire must be controlled by an occupancy or vacancy sensor providing automatic-off functionality. Lighting inside drawers and cabinets with opaque fronts or doors must have controls that turn the light off when the drawer or door is closed.
§ 150.0(k)2F:	**Dimmers.** Lighting in habitable spaces (e.g., living rooms, dining rooms, kitchens, and bedrooms) must have readily accessible wall-mounted dimming controls that allow the lighting to be manually adjusted up and down. Forward phase cut dimmers controlling LED light sources in these spaces must comply with NEMA SSL 7A.
§ 150.0(k)2K:	**Independent controls.** Integrated lighting of exhaust fans shall be controlled independently from the fans. Lighting under cabinets or shelves, lighting in display cabinets, and switched outlets must be controlled separately from ceiling-installed lighting.
§ 150.0(k)3A:	**Residential Outdoor Lighting.** For single-family residential buildings, outdoor lighting permanently mounted to a residential building, or to other buildings on the same lot, must have a manual on/off switch and either a photocell and motion sensor or automatic time switch control) or an astronomical time clock. An energy management control system that provides the specified control functionality and meets all applicable requirements may be used to meet these requirements.
§ 150.0(k)4:	**Internally illuminated address signs.** Internally illuminated address signs must either comply with § 140.8 or consume no more than 5 watts of power.
§ 150.0(k)5:	**Residential Garages for Eight or More Vehicles.** Lighting for residential parking garages for eight or more vehicles must comply with the applicable requirements for nonresidential garages in §§ 110.9, 130.0, 130.1, 130.4, 140.6, and 141.0.

Solar Readiness:

§ 110.10(a)1:	**Single-family Residences.** Single-family residences located in subdivisions with 10 or more single-family residences and where the application for a tentative subdivision map for the residences has been deemed complete and approved by the enforcement agency, which do not have a photovoltaic system installed, must comply with the requirements of § 110.10(b)-(e).
§110.10(b)1A:	**Minimum Solar Zone Area.** The solar zone must have a minimum total area as described below. The solar zone must comply with access, pathway, smoke ventilation, and spacing requirements as specified in Title 24, Part 9 or other parts of Title 24 or in any requirements adopted by a local jurisdiction. The solar zone total area must be comprised of areas that have no dimension less than 5 feet and are no less than 80 square feet each for buildings with roof areas less than or equal to 10,000 square feet or no less than 160 square feet each for buildings with roof areas greater than 10,000 square feet. For single-family residences, the solar zone must be located on the roof or overhang of the building and have a total area no less than 250 square feet. *
§ 110.10(b)2:	**Azimuth.** All sections of the solar zone located on steep-sloped roofs must have an azimuth between 90-300° of true north.
§ 110.10(b)3A:	**Shading.** The solar zone must not contain any obstructions, including but not limited to: vents, chimneys, architectural features, and roof mounted equipment. *
§ 110.10(b)3B:	**Shading.** Any obstruction located on the roof or any other part of the building that projects above a solar zone must be located at least twice the horizontal distance of the height difference between the highest point of the obstruction and the horizontal projection of the nearest point of the solar zone, measured in the vertical plane. *
§ 110.10(b)4:	**Structural Design Loads on Construction Documents.** For areas of the roof designated as a solar zone, the structural design loads for roof dead load and roof live load must be clearly indicated on the construction documents.
§ 110.10(c):	**Interconnection Pathways.** The construction documents must indicate: a location reserved for inverters and metering equipment and a pathway reserved for routing of conduit from the solar zone to the point of interconnection with the electrical service; and for single-family residences and central water-heating systems, a pathway reserved for routing plumbing from the solar zone to the water-heating system.
§ 110.10(d):	**Documentation.** A copy of the construction documents or a comparable document indicating the information from § 110.10(b)-(c) must be provided to the occupant.
§ 110.10(e)1:	**Main Electrical Service Panel.** The main electrical service panel must have a minimum busbar rating of 200 amps.
§ 110.10(e)2:	**Main Electrical Service Panel.** The main electrical service panel must have a reserved space to allow for the installation of a double pole circuit breaker for a future solar electric installation. The reserved space must be permanently marked as "For Future Solar Electric."

Electric and Energy Storage Ready:

5/6/22

residential mandatory measures summary; page 7

2022 Single-Family Residential Mandatory Requirements Summary

§ 150.0(s)	**Energy Storage System (ESS) Ready.** All single-family residences must meet all of the following: Either ESS-ready interconnection equipment with backed up capacity of 60 amps or more and four or more ESS supplied branch circuits, *or* a dedicated raceway from the main service to a subpanel that supplies the branch circuits in § 150.0(s); at least four branch circuits must be identified and have their source collocated at a single panelboard suitable to be supplied by the ESS, with one circuit supplying the refrigerator, one lighting circuit near the primary exit, and one circuit supplying a sleeping room receptacle outlet; main panelboard must have a minimum busbar rating of 225 amps; sufficient space must be reserved to allow future installation of a system isolation equipment/transfer switch within 3' of the main panelboard, with raceways installed between the panelboard and the switch location to allow the connection of backup power source.
§ 150.0(t)	**Heat Pump Space Heater Ready.** Systems using gas or propane furnaces to serve individual dwelling units must include: A dedicated unobstructed 240V branch circuit wiring installed within 3' of the furnace with circuit conductors rated at least 30 amps with the blank cover identified as "240V ready;" and a reserved main electrical service panel space to allow for the installation of a double pole circuit breaker permanently marked as "For Future 240V use."
§ 150.0(u)	**Electric Cooktop Ready.** Systems using gas or propane cooktop to serve individual dwelling units must include: A dedicated unobstructed 240V branch circuit wiring installed within 3' of the cooktop with circuit conductors rated at least 50 amps with the blank cover identified as "240V ready;" and a reserved main electrical service panel space to allow for the installation of a double pole circuit breaker permanently marked as "For Future 240V use."
§ 150.0(v)	**Electric Clothes Dryer Ready.** Clothes dryer locations with gas or propane plumbing to serve individual dwelling units must include: A dedicated unobstructed 240V branch circuit wiring installed within 3' of the dryer location with circuit conductors rated at least 30 amps with the blank cover identified as "240V ready;" and a reserved main electrical service panel space to allow for the installation of a double pole circuit breaker permanently marked as "For Future 240V use."

*Exceptions may apply.

5/6/22

residential mandatory measures summary; page 8

HVAC SYSTEM HEATING AND COOLING LOADS SUMMARY

Project Name	Date
Heliotrope Duplex-Unit A Residence	5/2/2023
System Name: HVAC -Heat Pump #1	Floor Area: 1,331

ENGINEERING CHECKS

Number of Systems	1
Heating System	
Output per System	66,000
Total Output (Btuh)	66,000
Output (Btuh/sqft)	49.6
Cooling System	
Output per System	60,000
Total Output (Btuh)	60,000
Total Output (Tons)	5.0
Total Output (Btuh/sqft)	45.1
Total Output (sqft/Ton)	266.2
Air System	
CFM per System	2,000
Airflow (cfm)	2,000
Airflow (cfm/sqft)	1.50
Airflow (cfm/Ton)	400.0
Outside Air (%)	0.0%
Outside Air (cfm/sqft)	0.00

Note: values above given at ARI conditions

SYSTEM LOAD

	COIL COOLING PEAK CFM	Sensible	Latent	COIL HTG. PEAK CFM	Sensible
Total Room Loads	613	13,182	1,148	399	15,891
Return Vented Lighting		0			
Return Air Ducts		157			207
Return Fan		0			0
Ventilation	0	0	0	0	0
Supply Fan		0			0
Supply Air Ducts		157			207
TOTAL SYSTEM LOAD		13,496	1,148		16,304
HVAC EQUIPMENT SELECTION					
5-TON PUMY-P60NKMU3(-BS		53,250	5,787		50,489
Total Adjusted System Output (Adjusted for Peak Design conditions)		53,250	5,787		50,489
TIME OF SYSTEM PEAK		Aug 3 PM			Jan 1 AM

HEATING SYSTEM PSYCHROMETRICS (Airstream Temperatures at Time of Heating Peak)

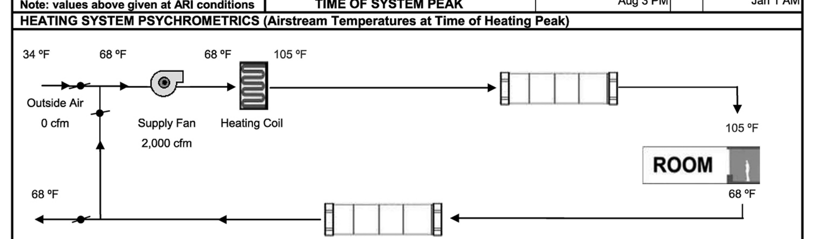

COOLING SYSTEM PSYCHROMETRICS (Airstream Temperatures at Time of Cooling Peak)

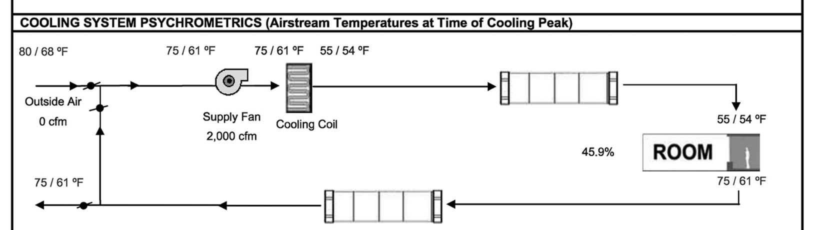

residential mandatory measures summary; page 9

HVAC SYSTEM HEATING AND COOLING LOADS SUMMARY

Project Name	Date
Heliotrope Duplex-Unit A Residence	5/2/2023
System Name: HVAC Heat Pump #2	Floor Area: 1,410

ENGINEERING CHECKS

Number of Systems	1
Heating System	
Output per System	66,000
Total Output (Btuh)	66,000
Output (Btuh/sqft)	46.8
Cooling System	
Output per System	60,000
Total Output (Btuh)	60,000
Total Output (Tons)	5.0
Total Output (Btuh/sqft)	42.6
Total Output (sqft/Ton)	282.0
Air System	
CFM per System	2,000
Airflow (cfm)	2,000
Airflow (cfm/sqft)	1.42
Airflow (cfm/Ton)	400.0
Outside Air (%)	0.0%
Outside Air (cfm/sqft)	0.00

Note: values above given at ARI conditions

SYSTEM LOAD

	COIL COOLING PEAK CFM	Sensible	Latent	COIL HTG. PEAK CFM	Sensible
Total Room Loads	822	17,665	1,216	402	16,001
Return Vented Lighting		0			
Return Air Ducts		210			208
Return Fan		0			0
Ventilation	0	0	0	0	0
Supply Fan		0			0
Supply Air Ducts		210			208
TOTAL SYSTEM LOAD		18,085	1,216		16,417
HVAC EQUIPMENT SELECTION					
5-TON PUMY-P60NKMU3(-BS		53,255	5,799		50,489
Total Adjusted System Output (Adjusted for Peak Design conditions)		53,255	5,799		50,489
TIME OF SYSTEM PEAK		Aug 3 PM			Jan 1 AM

HEATING SYSTEM PSYCHROMETRICS (Airstream Temperatures at Time of Heating Peak)

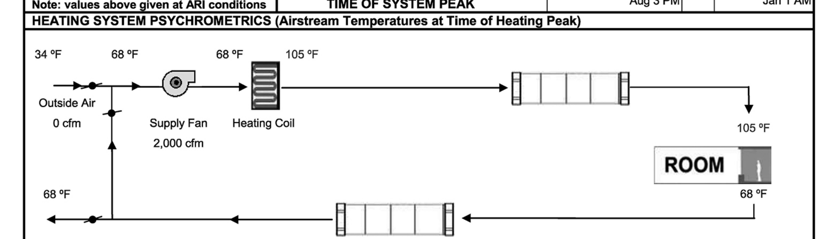

COOLING SYSTEM PSYCHROMETRICS (Airstream Temperatures at Time of Cooling Peak)

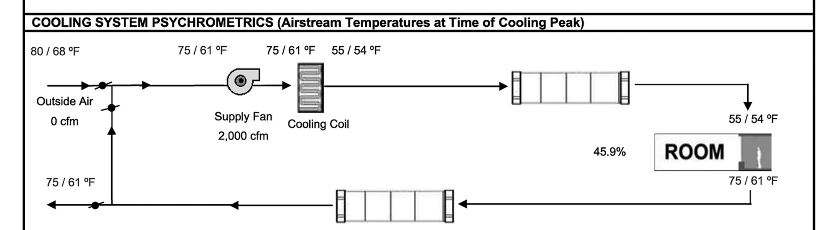

unit 'A'

LICENSED ARCHITECT
ERIC D. AUST
C-29374
31 MAY 2025
RENEWAL DATE
STATE OF CALIFORNIA

22 may 2023

ⓒ copyright 2023

job #2117

eric aust
architect
62 balboa coves
newport beach, california 92663
tel 949.637.5220

client:
JRC real estate development
14930 alondra blvd.
la mirada, california 90638
tel 562.623.9328

GENERAL INFORMATION

01	Project Name	Heliotrope Duplex-Unit B Residence			
02	Run Title	Title 24 Analysis			
03	Project Location	407 Heliotrope Ave. Unit #B			
04	City	Corona Del Mar	05	Standards Version	2022
06	Zip code	92625	07	Software Version	EnergyPro 9.1
08	Climate Zone	6	09	Front Orientation (deg/ Cardinal)	225
10	Building Type	Single family	11	Number of Dwelling Units	1
12	Project Scope	Newly Constructed	13	Number of Bedrooms	3
14	Addition Cond. Floor Area (ft²)	0	15	Number of Stories	3
16	Existing Cond. Floor Area (ft²)	n/a	17	Fenestration Average U-factor	0.3
18	Total Cond. Floor Area (ft²)	1737	19	Glazing Percentage (%)	29.00%
20	ADU Bedroom Count	n/a			

COMPLIANCE RESULTS

01	Building Complies with Computer Performance
02	This building incorporates features that require field testing and/or verification by a certified HERS rater under the supervision of a CEC-approved HERS provider.
03	This building incorporates one or more Special Features shown below

ENERGY DESIGN RATINGS

	Energy Design Ratings			Compliance Margins		
	Source Energy (EDR1)	Efficiency[1] EDR (EDR2efficiency)	Total[2] EDR (EDR2total)	Source Energy (EDR1)	Efficiency[1] EDR (EDR2efficiency)	Total[2] EDR (EDR2total)
Standard Design	37.6	37	31.6			
Proposed Design	29.3	23.2	20.8	8.3	13.8	10.8
RESULT[3]: PASS						

[1]Efficiency EDR includes improvements like a better building envelope and more efficient equipment
[2]Total EDR includes efficiency and demand response measures such as photovoltaic (PV) system and batteries
[3]Building complies when source energy, efficiency and total compliance margins are greater than or equal to zero and unmet load hour limits are not exceeded

- Standard Design PV Capacity: 2.47 kWdc
- Proposed PV system downsized to 2.80 kWdc (a factor of 0.009) due to cap of 1 x proposed design electricity use

ENERGY USE SUMMARY

Energy Use	Standard Design Source Energy (EDR1) (kBtu/ft²-yr)	Standard Design TDV Energy (EDR2) (kTDV/ft²-yr)	Proposed Design Source Energy (EDR1) (kBtu/ft²-yr)	Proposed Design TDV Energy (EDR2) (kTDV/ft²-yr)	Compliance Margin (EDR1)	Compliance Margin (EDR2)
Space Heating	2.13	14.44	0.93	6.85	1.2	7.59
Space Cooling	0.31	13.26	0.21	9.64	0.1	3.62
IAQ Ventilation	0.35	3.75	0.35	3.75	0	0
Water Heating	1.38	14.76	0.75	8.73	0.63	6.03
Self Utilization/Flexibility Credit				0		0
Efficiency Compliance Total	**4.17**	**46.21**	**2.24**	**28.97**	**1.93**	**17.24**
Photovoltaics	-1.61	-44.17	-1.98	-52.71		
Battery			0	0		
Flexibility						
Indoor Lighting	0.78	7.87	0.78	7.87		
Appl. & Cooking	3.8	30.9	3.8	30.92		
Plug Loads	3.15	32.94	3.15	32.94		
Outdoor Lighting	0.19	1.75	0.19	1.75		
TOTAL COMPLIANCE	**10.48**	**75.5**	**8.18**	**49.74**		

ENERGY USE INTENSITY

	Standard Design (kBtu/ft² - yr)	Proposed Design (kBtu/ft² - yr)	Compliance Margin (kBtu/ft² - yr)	Margin Percentage
Gross EUI[1]	14.55	12.31	2.24	15.4
Net EUI[2]	6.37	2.48	3.89	61.07

Notes
1. Gross EUI is Energy Use Total (not including PV) / Total Building Area.
2. Net EUI is Energy Use Total (including PV) / Total Building Area.

REQUIRED PV SYSTEMS

01	02	03	04	05	06	07	08	09	10	11	12
DC System Size (kWdc)	Exception	Module Type	Array Type	Power Electronics	CFI	Azimuth (deg)	Tilt Input	Array Angle (deg)	Tilt: (x in 12)	Inverter Eff. (%)	Annual Solar Access (%)
2.8	NA	Standard (14-17%)	Fixed	none	false	180	Degrees	30	6.93	96	100

REQUIRED SPECIAL FEATURES

The following are features that must be installed as condition for meeting the modeled energy performance for this computer analysis.

- Window overhangs and/or fins
- Variable capacity heat pump compliance option (verification details from VCHP Staff report, Appendix B, and RA3)
- Northwest Energy Efficiency Alliance (NEEA) rated heat pump water heater; specific brand/model, or equivalent, must be installed

HERS FEATURE SUMMARY

The following is a summary of the features that must be field-verified by a certified HERS Rater as a condition for meeting the modeled energy performance for this computer analysis. Additional detail is provided in the building tables below. Registered CF2Rs and CF3Rs are required to be completed in the HERS Registry

- Quality insulation installation (QII)
- Indoor air quality ventilation
- Kitchen range hood
- Verified SEER/SEER2
- Verified Refrigerant Charge
- Airflow in habitable rooms (SC3.1.4.1.7)
- Minimum Airflow according to RA3.3 and SC3.3.3.4.1
- Verified HSPF
- Verified heat pump rated heating capacity
- CEC certified low-static VCHP system
- Wall-mounted thermostat in zones greater than 150 ft2 (SC3.4.5)
- Verified air filter sizing (SC3.1.4.7)
- Verified air filter pressure drop rating
- Ducts located entirely in conditioned space confirmed by duct leakage testing
- Verified low-leakage ducts in conditioned space must meet maximum 25 cfm leakage to outside (RA3.1.4.3.8)

BUILDING - FEATURES INFORMATION

01	02	03	04	05	06	07
Project Name	Conditioned Floor Area (ft²)	Number of Dwelling Units	Number of Bedrooms	Number of Zones	Number of Ventilation Cooling Systems	Number of Water Heating Systems
Heliotrope Duplex-Unit B Residence	1737	1	3	3	0	1

ZONE INFORMATION

01	02	03	04	05	06	07
Zone Name	Zone Type	HVAC System Name	Zone Floor Area (ft²)	Avg. Ceiling Height	Water Heating System 1	Status
1st Floor	Conditioned	HVAC -Heat Pump #11	395	8.6	DHW Sys 1	New
2nd Floor	Conditioned	HVAC Heat Pump #22	1258	9.4	DHW Sys 1	New
3RD Floor	Conditioned	HVAC Heat Pump #22	84	8	DHW Sys 1	New

OPAQUE SURFACES

01	02	03	04	05	06	07	08
Name	Zone	Construction	Azimuth	Orientation	Gross Area (ft²)	Window and Door Area (ft2)	Tilt (deg)
SW Wall	1st Floor	R21- Wall-	225	Front	215	70.008	90
NW Wall	1st Floor	R21- Wall-	315	Left	102	0	90
Back Wall	1st Floor	R21- Wall-	45	Back	210	0	90
Right Wall	1st Floor	R21- Wall-	135	Right	180	12	90
SW Wall 2	2nd Floor	R21- Wall-	225	Front	414	174	90
NW Wall 2X6	2nd Floor	R21- Wall-	315	Left	213	60	90
NE Wall	2nd Floor	R21- Wall-	45	Back	414	69	90
SE Wall	2nd Floor	R21- Wall-	135	Right	320	25	90
NW Wall 2X4	2nd Floor	R21- Wall-	315	Left	107	20	90
SW Wall 2x4	3RD Floor	R-13 Wall	225	Front	134	16	90
NW Wall 2X4 2	3RD Floor	R-13 Wall	90	n/a	81	41.004	90
NE Wall 2X4	3RD Floor	R-13 Wall	45	Back	134	41.004	90
SE Wall 2X4	3RD Floor	R-13 Wall	135	Right	121	0	90
Interior Surface	1st Floor>>2nd Floor	R-0 Wall1	n/a	n/a	200	0	n/a
Interior Surface 2	2nd Floor>>1st Floor	R-0 Wall1	n/a	n/a	100	0	n/a
Interior Surface 3	3RD Floor>>2nd Floor	R-0 Wall1	n/a	n/a	100	0	n/a
NW Wall 2	__Garage__	R-0 Wall	315	Left	86	67	90
NE Wall 2	__Garage__	R-0 Wall	45	Back	172	0	90
SW Wall to Garage	__Garage__	R21- Wall-	225	Front	100	35	90
NW Wall To Garage	__Garage__	R21- Wall-	315	Left	86	18	90
NE Wall To Garage	__Garage__	R21- Wall-	45	Back	86	0	90

OPAQUE SURFACES - CATHEDRAL CEILINGS

01	02	03	04	05	06	07	08	09	10	11
Name	Zone	Construction	Azimuth	Orientation	Area (ft²)	Skylight Area (ft²)	Roof Rise (x in 12)	Roof Reflectance	Roof Emittance	Cool Roof
Ceiling Above	1st Floor	Ceiling Above-	0	n/a	395	0	0	0.1	0.85	No
Roof Deck	2nd Floor	R-30 Roof Deck	0	n/a	444	0	1	0.1	0.85	No
Ceiling Above 2	2nd Floor	--Ceiling Above-	0	n/a	84	0	0	0.1	0.85	No
Roof	2nd Floor	R-38 Roof Cathedral	0	n/a	730	0	3	0.1	0.85	No
Roof-	3RD Floor	R-38 Roof Cathedral	0	n/a	84	0	3	0.1	0.85	No
Ceiling Above 3	__Garage__	-Ceiling Above-	0	n/a	249	0	0	0.1	0.85	No

FENESTRATION / GLAZING

01	02	03	04	05	06	07	08	09	10	11	12	13	14
Name	Type	Surface	Orientation	Azimuth	Width (ft)	Height (ft)	Mult.	Area (ft²)	U-factor	U-factor Source	SHGC	SHGC Source	Exterior Shading
(2) #H	Window	SW Wall	Front	225			1	26	0.3	NFRC	0.23	NFRC	Bug Screen
#F	Window	SW Wall	Front	225			1	13	0.3	NFRC	0.23	NFRC	Bug Screen
#E	Window	SW Wall	Front	225	3	8	0	7.01	0.3	NFRC	0.23	NFRC	Bug Screen
#G	Window	Right Wall	Right	135			1	12	0.3	NFRC	0.23	NFRC	Bug Screen
2XRL	Window	SW Wall 2	Front	225			1	36	0.3	NFRC	0.23	NFRC	Bug Screen
#M	Window	SW Wall 2	Front	225			1	7	0.3	NFRC	0.23	NFRC	Bug Screen
#30	Window	SW Wall 2	Front	225			1	131	0.3	NFRC	0.23	NFRC	Bug Screen
2XRN	Window	NW Wall 2X6	Left	315			1	60	0.3	NFRC	0.23	NFRC	Bug Screen
2XRL 2	Window	NE Wall	Back	45			1	36	0.3	NFRC	0.23	NFRC	Bug Screen

FENESTRATION / GLAZING

01	02	03	04	05	06	07	08	09	10	11	12	13	14
Name	Type	Surface	Orientation	Azimuth	Width (ft)	Height (ft)	Mult.	Area (ft²)	U-factor	U-factor Source	SHGC	SHGC Source	Exterior Shading
2XRH	Window	NE Wall	Back	45			1	26	0.3	NFRC	0.23	NFRC	Bug Screen
#E 2	Window	NE Wall	Back	45			1	7	0.3	NFRC	0.23	NFRC	Bug Screen
#E 3	Window	SE Wall	Right	135			1	7	0.3	NFRC	0.23	NFRC	Bug Screen
#O	Window	SE Wall	Right	135			1	18	0.3	NFRC	0.23	NFRC	Bug Screen
#E 4	Window	NW Wall 2X4	Left	315			1	7	0.3	NFRC	0.23	NFRC	Bug Screen
#H	Window	NW Wall 2X4	Left	315			1	13	0.3	NFRC	0.23	NFRC	Bug Screen
#R	Window	SW Wall 2x4	Front	225			1	16	0.3	NFRC	0.23	NFRC	Bug Screen
#49	Window	NW Wall 2X4 2	Back	45	6	6.8	1	41	0.3	NFRC	0.23	NFRC	Bug Screen
#50	Window	NE Wall 2X4	Back	45	6	6.8	1	41	0.3	NFRC	0.23	NFRC	Bug Screen

OPAQUE DOORS

01	02	03	04
Name	Side of Building	Area (ft²)	U-factor
#11-Door	SW Wall	24	0.102
#09 Garage Door	NW Wall 2	67	0.5
#10 Door	SW Wall to Garage	35	0.102
#12-Door	NW Wall To Garage	18	0.102

OVERHANGS AND FINS

01	02	03	04	05	06	07	08	09	10	11	12	13	14
Window	Overhang					Left Fin				Right Fin			
	Depth	Dist Up	Left Extent	Right Extent	Flap Ht.	Depth	Top Up	Dist L	Bot Up	Depth	Top Up	Dist R	Bot Up
#E	6	0.1	6	6	0	2	0	0.1	0	0	0	0	0
#49	11	0.1	2	2	0	2	0	0.1	0	0	0	0	0
#50	11	0.1	2	2	0	2	0	0.1	0	0	0	0	0

SLAB FLOORS

01	02	03	04	05	06	07	08
Name	Zone	Area (ft²)	Perimeter (ft)	Edge Insul. R-value and Depth	Edge Insul. R-value and Depth	Carpeted Fraction	Heated
Slab-on-Grade	1st Floor	395	90	none	0	80%	No
Slab-on-Grade 2	__Garage__	230	60	none	0	0%	No

OPAQUE SURFACE CONSTRUCTIONS

01	02	03	04	05	06	07	08
Construction Name	Surface Type	Construction Type	Framing	Total Cavity R-value	Interior / Exterior Continuous R-value	U-factor	Assembly Layers
R-0 Wall	Exterior Walls	Wood Framed Wall	2x4 @ 16 in. O. C.	R-0	None / None	0.361	Inside Finish: Gypsum Board Cavity / Frame: no insul. / 2x4 Exterior Finish: 3 Coat Stucco
R21- Wall-	Exterior Walls	Wood Framed Wall	2x6 @ 16 in. O. C.	R-21	None / None	0.066	Inside Finish: Gypsum Board Cavity / Frame: R-21 / 2x6 Exterior Finish: Wood Siding/sheathing/decking

a0.4

title 24 calculations

heliotrope duplex

407 heliotrope avenue
corona del mar, california
92625

unit 'B'

LICENSED ARCHITECT
ERIC D. AUST
C-29374
31 MAY 2025
RENEWAL DATE
STATE OF CALIFORNIA

22 may 2023

© copyright 2023

job #2117

eric aust
architect
62 balboa coves
newport beach, california 92663
tel 949.637.5220

client:
JRC real estate development
14930 alondra blvd.
la mirada, california 90638
tel 562.623.9328

OPAQUE SURFACE CONSTRUCTIONS

01	02	03	04	05	06	07	08
Construction Name	Surface Type	Construction Type	Framing	Total Cavity R-value	Interior / Exterior Continuous R-value	U-factor	Assembly Layers
R-13 Wall	Exterior Walls	Wood Framed Wall	2x4 @ 16 in. O. C.	R-13	None / None	0.095	Inside Finish: Gypsum Board Cavity / Frame: R-13 / 2x4 Exterior Finish: Wood Siding/sheathing/decking
-Ceiling Above-	Cathedral Ceilings	Wood Framed Ceiling	2x6 @ 16 in. O. C.	R-19	None / None	0.058	Roofing: Light Roof (Asphalt Shingle) Roof Deck: Wood Siding/sheathing/decking Cavity / Frame: R-19 in 5-1/2 in. (R-18) / 2x6 Inside Finish: Gypsum Board
Ceiling Above-	Cathedral Ceilings	Wood Framed Ceiling	2x6 @ 16 in. O. C.	R-19	None / None	0.058	Roofing: Light Roof (Asphalt Shingle) Roof Deck: Wood Siding/sheathing/decking Cavity / Frame: R-19 in 5-1/2 in. (R-18) / 2x6 Inside Finish: Gypsum Board
R-30 Roof Deck	Cathedral Ceilings	Wood Framed Ceiling	2x10 @ 16 in. O. C.	R-30	None / None	0.037	Roofing: Light Roof (Asphalt Shingle) Roof Deck: Wood Siding/sheathing/decking Cavity / Frame: R-30 / 2x10 Inside Finish: Gypsum Board
--Ceiling Above-	Cathedral Ceilings	Wood Framed Ceiling	2x6 @ 16 in. O. C.	R-19	None / None	0.058	Roofing: Light Roof (Asphalt Shingle) Roof Deck: Wood Siding/sheathing/decking Cavity / Frame: R-19 in 5-1/2 in. (R-18) / 2x6 Inside Finish: Gypsum Board

OPAQUE SURFACE CONSTRUCTIONS

01	02	03	04	05	06	07	08
Construction Name	Surface Type	Construction Type	Framing	Total Cavity R-value	Interior / Exterior Continuous R-value	U-factor	Assembly Layers
R-38 Roof Cathedral	Cathedral Ceilings	Wood Framed Ceiling	2x12 @ 16 in. O. C.	R-38	None / None	0.03	Roofing: Light Roof (Asphalt Shingle) Roof Deck: Wood Siding/sheathing/decking Cavity / Frame: R-38 / 2x12 Inside Finish: Gypsum Board
R-0 Wall1	Interior Walls	Wood Framed Wall	2x4 @ 16 in. O. C.	R-0	None / None	0.277	Inside Finish: Gypsum Board Cavity / Frame: no insul. / 2x4 Other Side Finish: Gypsum Board

BUILDING ENVELOPE - HERS VERIFICATION

01	02	03	04	05
Quality Insulation Installation (QII)	High R-value Spray Foam Insulation	Building Envelope Air Leakage	CFM50	CFM50
Required	Not Required	N/A	n/a	n/a

WATER HEATING SYSTEMS

01	02	03	04	05	06	07	08	09
Name	System Type	Distribution Type	Water Heater Name	Number of Units	Solar Heating System	Compact Distribution	HERS Verification	Water Heater Name (#)
DHW Sys 1	Domestic Hot Water (DHW)	Standard	DHW Heater 1	1	n/a	None	n/a	DHW Heater 1 (1)

WATER HEATERS - NEEA HEAT PUMP

01	02	03	04	05	06	07	08
Name	# of Units	Tank Vol. (gal)	NEEA Heat Pump Brand	NEEA Heat Pump Model	Tank Location	Duct Inlet Air Source	Duct Outlet Air Source
DHW Heater 1	1	50	AOSmith	AOSmithHPS1050M4SDV2xx	1st Floor	1st Floor	1st Floor

WATER HEATING - HERS VERIFICATION

01	02	03	04	05	06	07
Name	Pipe Insulation	Parallel Piping	Compact Distribution	Compact Distribution Type	Recirculation Control	Shower Drain Water Heat Recovery
DHW Sys 1 - 1/1	Not Required	Not Required	Not Required	None	Not Required	Not Required

SPACE CONDITIONING SYSTEMS

01	02	03	04	05	06	07	08	09
Name	System Type	Heating Unit Name	Heating Equipment Count	Cooling Unit Name	Cooling Equipment Count	Fan Name	Distribution Name	Required Thermostat Type
HVAC -Heat Pump #11	Heat pump heating cooling	Heat Pump System 1	1	Heat Pump System 1	1	n/a	n/a	Setback
HVAC Heat Pump #22	Heat pump heating cooling	Heat Pump System 2	1	Heat Pump System 2	1	n/a	n/a	Setback

HVAC - HEAT PUMPS

01	02	03	04	05	06	07	08	09	10	11	12	13
			Heating				Cooling					
Name	System Type	Number of Units	Efficiency Type	HSPF / HSPF2 / COP	Cap 47	Cap 17	Efficiency Type	SEER / SEER2	EER / EER / CEER	Zonally Controlled	Compressor Type	HERS Verification
Heat Pump System 1	VCHP-ducted	1	HSPF	10.7	66000	59000	EERSEER	17.8	11.1	Not Zonal	Single Speed	Heat Pump System 1-hers-htpump

HVAC - HEAT PUMPS

01	02	03	04	05	06	07	08	09	10	11	12	13
			Heating				Cooling					
Name	System Type	Number of Units	Efficiency Type	HSPF / HSPF2 / COP	Cap 47	Cap 17	Efficiency Type	SEER / SEER2	EER / EER / CEER	Zonally Controlled	Compressor Type	HERS Verification
Heat Pump System 2	VCHP-ducted	1	HSPF	10.7	66000	59000	EERSEER	17.8	11.1	Not Zonal	Single Speed	Heat Pump System 2-hers-htpump

HVAC HEAT PUMPS - HERS VERIFICATION

01	02	03	04	05	06	07	08	09
Name	Verified Airflow	Airflow Target	Verified EER/EER2	Verified SEER/SEER2	Verified Refrigerant Charge	Verified HSPF/HSPF2	Verified Heating Cap 47	Verified Heating Cap 17
Heat Pump System 1-hers-htpump	Not Required	0	Not Required	Required	Yes	Yes	Yes	Yes
Heat Pump System 2-hers-htpump	Not Required	0	Not Required	Required	Yes	Yes	Yes	Yes

VARIABLE CAPACITY HEAT PUMP COMPLIANCE OPTION - HERS VERIFICATION

01	02	03	04	05	06	07	08	09	10
Name	Certified Low-Static VCHP System	Airflow to Habitable Rooms	Ductless Units in Conditioned Space	Wall Mount Thermostat	Air Filter Sizing & Pressure Drop Rating	Low Leakage Ducts in Conditioned Space	Minimum Airflow per RA3.3 and SC3.3.3.4.1	Certified non-continuous Fan	Indoor Fan not Running Continuously
Heat Pump System 1	Required	Required	Not required	Required	Required	Required	Required	Required	Required
Heat Pump System 2	Required	Required	Not required	Required	Required	Required	Required	Required	Required

INDOOR AIR QUALITY (IAQ) FANS

01	02	03	04	05	06	07	08	09
Dwelling Unit	Airflow (CFM)	Fan Efficacy (W/CFM)	IAQ Fan Type	Includes Heat/Energy Recovery?	IAQ Recovery Effectiveness - SRE	Includes Fault Indicator Display?	HERS Verification	Status
SFam IAQVentRpt	79	0.35	Exhaust	No	n/a	No	Yes	

DOCUMENTATION AUTHOR'S DECLARATION STATEMENT

I, I certify that this Certificate of Compliance documentation is accurate and complete.

Documentation Author Name: Jam Hezar	Documentation Author Signature: Jam Hezar
Company: Alliance 24 Title	Signature Date: 2023-05-02 16:02:28
Address: 325 Berry Street	CEA/ HERS Certification Identification (If applicable): ICC#8099390 and USGBC-LEED AP BD C
City/State/Zip: San Francisco, CA 94158	Phone: 415-422-9925

RESPONSIBLE PERSON'S DECLARATION STATEMENT

I certify the following under penalty of perjury, under the laws of the State of California:
1. I am eligible under Division 3 of the Business and Professions Code to accept responsibility for the building design identified on this Certificate of Compliance.
2. I certify that the energy features and performance specifications identified on this Certificate of Compliance conform to the requirements of Title 24, Part 1 and Part 6 of the California Code of Regulations.
3. The building design features or system design features identified on this Certificate of Compliance are consistent with the information provided on other applicable compliance documents, worksheets, calculations, plans and specifications submitted to the enforcement agency for approval with this building permit application.

Responsible Designer Name: Eric Aust	Responsible Designer Signature: Eric Aust
Company: Eric Aust Architect	Date Signed: 2023-05-02 17:03:04
Address: 62 Balboa Coves	License: C-29374
City/State/Zip: Newport Beach, CA 92663	Phone: 949-637-5220

Digitally signed by CalCERTS. This digital signature is provided in order to secure the content of this registered document, and in no way implies Registration Provider responsibility for the accuracy of the information.

Easy to Verify at CalCERTS.com

a0.5

title 24 calculations

heliotrope duplex

407 heliotrope avenue
corona del mar, california
92625

unit 'B'

LICENSED ARCHITECT
ERIC D. AUST
C-29374
31 MAY 2025
RENEWAL DATE
STATE OF CALIFORNIA

22 may 2023

© copyright 2023

job #2117

eric aust
architect
62 balboa coves
newport beach, california 92663
tel 949.637.5220

client:
JRC real estate development
14930 alondra blvd.
la mirada, california 90638
tel 562.623.9328

a0.6

title-24 residential mandatory measures summary

heliotrope duplex

407 heliotrope avenue
corona del mar, california
92625

unit 'B'

RESIDENTIAL MEASURES SUMMARY — RMS-1

Project Name	Building Type	Date
Heliotrope Duplex-Unit B Residence	☑ Single Family ☐ Addition Alone ☐ Multi Family ☐ Existing+ Addition/Alteration	5/2/2023

Project Address	California Energy Climate Zone	Total Cond. Floor Area	Addition	# of Units
407 Heliotrope Ave. Unit #B Corona Del M	CA Climate Zone 06	1,737	n/a	1

INSULATION

Construction	Type	Cavity	Area (ft²)	Special Features	Status
Wall	Wood Framed	R 21	1,745		New
Door	Wood Framed	R 13	24		New
Slab	Unheated Slab-on-Grade	- no insulation	395	Perim = 90'	New
Demising	Wood Framed	- no insulation	400		New
Roof	Wood Framed Rafter	R 19	395		New
Roof	Wood Framed Rafter	R 30	444		New
Roof	Wood Framed Rafter	R 19	84		New
Roof	Wood Framed Rafter	R 38	814		New

FENESTRATION Total Area: 504 Glazing Percentage: 29.0% New/Altered Average U-Factor: 0.30

Orientation	Area(ft²)	U-Fac	SHGC	Overhang	Sidefins	Exterior Shades	Status
Front (SW)	229.0	0.300	0.23	none	none	N/A	New
Front (SW)	7.0	0.300	0.23	6.0	2.00/0.00	N/A	New
Right (SE)	37.0	0.300	0.23	none	none	N/A	New
Left (NW)	80.0	0.300	0.23	none	none	N/A	New
Rear (NE)	69.0	0.300	0.23	none	none	N/A	New
Rear (E)	41.0	0.300	0.23	11.0	2.00/0.00	N/A	New
Rear (NE)	41.0	0.300	0.23	11.0	2.00/0.00	N/A	New

HVAC SYSTEMS

Qty.	Heating	Min. Eff	Cooling	Min. Eff	Thermostat	Status
1	Electric Heat Pump	10.70 HSPF	Split Heat Pump	17.8 SEER	Setback	New
1	Electric Heat Pump	10.70 HSPF	Split Heat Pump	17.8 SEER	Setback	New

HVAC DISTRIBUTION

Location	Heating	Cooling	Duct Location	Duct R-Value	Status
HVAC -Heat Pump #1	Ducted	Ducted	Conditioned	6.0	New
HVAC Heat Pump #2	Ducted	Ducted	Conditioned	6.0	New

WATER HEATING

Qty.	Type	Gallons	Min. Eff	Distribution	Status
1	Heat Pump	50	3.80	Standard	New

EnergyPro 9.1 by EnergySoft User Number: 6262 ID: 23-05103 Page 18 of 26

residential mandatory measures summary; page 1

RESIDENTIAL MEASURES SUMMARY — RMS-1

Project Name	Building Type	Date
Heliotrope Duplex-Unit B Residence	☑ Single Family ☐ Addition Alone ☐ Multi Family ☐ Existing+ Addition/Alteration	5/2/2023

Project Address	California Energy Climate Zone	Total Cond. Floor Area	Addition	# of Units
407 Heliotrope Ave. Unit #B Corona Del M	CA Climate Zone 06	1,737	n/a	1

INSULATION

Construction	Type	Cavity	Area (ft²)	Special Features	Status
Wall	Wood Framed	R 13	372		New

FENESTRATION Total Area: 504 Glazing Percentage: 29.0% New/Altered Average U-Factor: 0.30

Orientation	Area(ft²)	U-Fac	SHGC	Overhang	Sidefins	Exterior Shades	Status

HVAC SYSTEMS

Qty.	Heating	Min. Eff	Cooling	Min. Eff	Thermostat	Status

HVAC DISTRIBUTION

Location	Heating	Cooling	Duct Location	Duct R-Value	Status

WATER HEATING

Qty.	Type	Gallons	Min. Eff	Distribution	Status

EnergyPro 9.1 by EnergySoft User Number: 6262 ID: 23-05103 Page 19 of 26

residential mandatory measures summary; page 2

2022 Single-Family Residential Mandatory Requirements Summary

NOTE: Single-family residential buildings subject to the Energy Codes must comply with all applicable mandatory measures, regardless of the compliance approach used. Review the respective section for more information.
(04/2022)

Building Envelope:

§ 110.6(a)1:	**Air Leakage.** Manufactured fenestration, exterior doors, and exterior pet doors must limit air leakage to 0.3 CFM per square foot or less when tested per NFRC-400, ASTM E283, or AAMA/WDMA/CSA 101/I.S.2/A440-2011. *
§ 110.6(a)5:	**Labeling.** Fenestration products and exterior doors must have a label meeting the requirements of § 10-111(a).
§ 110.6(b):	**Field fabricated exterior doors and fenestration** products must use U-factors and solar heat gain coefficient (SHGC) values from Tables 110.6-A, 110.6-B, or JA4.5 for exterior doors. They must be caulked and/or weather-stripped. *
§ 110.7:	**Air Leakage.** All joints, penetrations, and other openings in the building envelope that are potential sources of air leakage must be caulked, gasketed, or weather stripped.
§ 110.8(a):	**Insulation Certification by Manufacturers.** Insulation must be certified by the Department of Consumer Affairs, Bureau of Household Goods and Services (BHGS).
§ 110.8(g):	**Insulation Requirements for Heated Slab Floors.** Heated slab floors must be insulated per the requirements of § 110.8(g).
§ 110.8(i):	**Roofing Products Solar Reflectance and Thermal Emittance.** The thermal emittance and aged solar reflectance values of the roofing material must meet the requirements of § 110.8(i) and be labeled per §10-113 when the installation of a cool roof is specified on the CF1R.
§ 110.8(j):	**Radiant Barrier.** When required, radiant barriers must have an emittance of 0.05 or less and be certified to the Department of Consumer Affairs.
§ 150.0(a):	**Roof Deck, Ceiling and Rafter Roof Insulation.** Roof decks in newly constructed attics in climate zones 4 and 8-16 area-weighted average U-factor not exceeding U-0.184. Ceiling and rafter roofs minimum R-22 insulation in wood-frame ceiling; or area-weighted average U-factor must not exceed 0.043. Rafter roof alterations minimum R-19 or area-weighted average U-factor of 0.054 or less. Attic access doors must have permanently attached insulation using adhesive or mechanical fasteners. The attic access must be gasketed to prevent air leakage. Insulation must be installed in direct contact with a roof or ceiling which is sealed to limit infiltration and exfiltration as specified in § 110.7, including but not limited to placing insulation either above or below the roof deck or on top of a drywall ceiling. *
§ 150.0(b):	**Loose-fill Insulation.** Loose fill insulation must meet the manufacturer's required density for the labeled R-value.
§ 150.0(c):	**Wall Insulation.** Minimum R-13 insulation in 2x4 inch wood framing wall or have a U-factor of 0.102 or less, or R-20 in 2x6 inch wood framing or have a U-factor of 0.071 or less. Opaque non-framed assemblies must have an overall assembly U-factor not exceeding 0.102. Masonry walls must meet Tables 150.1-A or B. *
§ 150.0(d):	**Raised-floor Insulation.** Minimum R-19 insulation in raised wood framed floor or 0.037 maximum U-factor. *
§ 150.0(f):	**Slab Edge Insulation.** Slab edge insulation must meet all of the following: have a water absorption rate, for the insulation material alone without facings, no greater than 0.3 percent; have a water vapor permeance no greater than 2.0 perm per inch; be protected from physical damage and UV light deterioration; and, when installed as part of a heated slab floor, meet the requirements of § 110.8(g).
§ 150.0(g)1:	**Vapor Retarder.** In climate zones 1 through 16, the earth floor of unvented crawl space must be covered with a Class I or Class II vapor retarder. This requirement also applies to controlled ventilation crawl space for buildings complying with the exception to §150.0(d).
§ 150.0(g)2:	**Vapor Retarder.** In climate zones 14 and 16, a Class I or Class II vapor retarder must be installed on the conditioned space side of all insulation in all exterior walls, vented attics, and unvented attics with air-permeable insulation.
§ 150.0(q):	**Fenestration Products.** Fenestration, including skylights, separating conditioned space from unconditioned space or outdoors must have a maximum U-factor of 0.45; or area-weighted average U-factor of all fenestration must not exceed 0.45. *

Fireplaces, Decorative Gas Appliances, and Gas Log:

§ 110.5(e)	**Pilot Light.** Continuously burning pilot lights are not allowed for indoor and outdoor fireplaces.
§ 150.0(e)1:	**Closable Doors.** Masonry or factory-built fireplaces must have a closable metal or glass door covering the entire opening of the firebox.
§ 150.0(e)2:	**Combustion Intake.** Masonry or factory-built fireplaces must have a combustion outside air intake, which is at least six square inches in area and is equipped with a readily accessible, operable, and tight-fitting damper or combustion-air control device. *
§ 150.0(e)3:	**Flue Damper.** Masonry or factory-built fireplaces must have a flue damper with a readily accessible control. *

Space Conditioning, Water Heating, and Plumbing System:

§ 110.0-§ 110.3:	**Certification.** Heating, ventilation, and air conditioning (HVAC) equipment, water heaters, showerheads, faucets, and all other regulated appliances must be certified by the manufacturer to the California Energy Commission. *
§ 110.2(a):	**HVAC Efficiency.** Equipment must meet the applicable efficiency requirements in Table 110.2-A through Table 110.2-N. *
§ 110.2(b):	**Controls for Heat Pumps with Supplementary Electric Resistance Heaters.** Heat pumps with supplementary electric resistance heaters must have controls that prevent supplementary heater operation when the heating load can be met by the heat pump alone; and in which the cut-on temperature for compression heating is higher than the cut-on temperature for supplementary heating, and the cut-off temperature for compression heating is higher than the cut-off temperature for supplementary heating. *
§ 110.2(c):	**Thermostats.** All heating or cooling systems not controlled by a central energy management control system (EMCS) must have a setback thermostat. *
§ 110.3(c)3:	**Insulation.** Unfired service water heater storage tanks and solar water-heating backup tanks must have adequate insulation, or tank surface heat loss rating.
§ 110.3(c)6:	**Isolation Valves.** Instantaneous water heaters with an input rating greater than 6.8 kBtu per hour (2 kW) must have isolation valves with hose bibbs or other fittings on both cold and hot water lines to allow for flushing the water heater when the valves are closed.

5/6/22

residential mandatory measures summary; page 3

2022 Single-Family Residential Mandatory Requirements Summary

§ 110.5:	**Pilot Lights.** Continuously burning pilot lights are prohibited for natural gas: fan-type central furnaces; household cooking appliances (except appliances without an electrical supply voltage connection with pilot lights that consume less than 150 Btu per hour); and pool and spa heaters. *
§ 150.0(h)1:	**Building Cooling and Heating Loads.** Heating and/or cooling loads are calculated in accordance with the ASHRAE Handbook, Equipment Volume, Applications Volume, and Fundamentals Volume; the SMACNA Residential Comfort System Installation Standards Manual; or the ACCA Manual J using design conditions specified in § 150.0(h)2.
§ 150.0(h)3A:	**Clearances.** Air conditioner and heat pump outdoor condensing units must have a clearance of at least five feet from the outlet of any dryer.
§ 150.0(h)3B:	**Liquid Line Drier.** Air conditioners and heat pump systems must be equipped with liquid line filter driers if required, as specified by the manufacturer's instructions.
§ 150.0(j)1:	**Water Piping, Solar Water-heating System Piping, and Space Conditioning System Line Insulation.** All domestic hot water piping must be insulated as specified in § 609.11 of the California Plumbing Code. *
§ 150.0(j)2:	**Insulation Protection.** Piping insulation must be protected from damage, including that due to sunlight, moisture, equipment maintenance, and wind as required by §120.3(b). Insulation exposed to weather must be water retardant and protected from UV light (no adhesive tapes). Insulation covering chilled water piping and refrigerant suction piping located outside the conditioned space must include, or be protected by, a Class I or Class II vapor retarder. Pipe insulation buried below grade must be installed in a waterproof and non-crushable casing or sleeve.
§ 150.0(n)1:	**Gas or Propane Water Heating Systems.** Systems using gas or propane water heaters to serve individual dwelling units must designate a space at least 2.5' x 2.5' x 7' suitable for the future installation of a heat pump water heater, and meet electrical and plumbing requirements, based on the distance between this designated space and the water heater location; and a condensate drain no more than 2" higher than the base of the water heater
§ 150.0(n)3:	**Solar Water-heating Systems.** Solar water-heating systems and collectors must be certified and rated by the Solar Rating and Certification Corporation (SRCC), the International Association of Plumbing and Mechanical Officials, Research and Testing (IAPMO R&T), or by a listing agency that is approved by the executive director.

Ducts and Fans:

§ 110.8(d)3:	**Ducts.** Insulation installed on an existing space-conditioning duct must comply with § 604.0 of the California Mechanical Code (CMC). If a contractor installs the insulation, the contractor must certify to the customer, in writing, that the insulation meets this requirement.
§ 150.0(m)1:	**CMC Compliance.** All air-distribution system ducts and plenums must meet CMC §§ 601.0-605.0 and ANSI/SMACNA-006-2006 HVAC Duct Construction Standards Metal and Flexible 3rd Edition. Portions of supply-air and return-air ducts and plenums must be insulated to R-6.0 or higher; ducts located entirely in conditioned space as confirmed through field verification and diagnostic testing (RA3.1.4.3.8) do not require insulation. Connections of metal ducts and inner core of flexible ducts must be mechanically fastened. Openings must be sealed with mastic, tape, or other duct-closure system that meets the applicable UL requirements, or aerosol sealant that meets UL 723. The combination of mastic and either mesh or tape must be used to seal openings greater than ¼", if mastic or tape is used. Building cavities, air handler support platforms, and plenums designed or constructed with materials other than sealed sheet metal, duct board or flexible duct must not be used to convey conditioned air. Building cavities and support platforms may contain ducts; ducts installed in these spaces must not be compressed. *
§ 150.0(m)2:	**Factory-Fabricated Duct Systems.** Factory-fabricated duct systems must comply with applicable requirements for duct construction, connections, and closures; joints and seams of duct systems and their components must not be sealed with cloth back rubber adhesive duct tapes unless such tape is used in combination with mastic and draw bands.
§ 150.0(m)3:	**Field-Fabricated Duct Systems.** Field-fabricated duct systems must comply with applicable requirements for: pressure-sensitive tapes, mastics, sealants, and other requirements specified for duct construction.
§ 150.0(m)7:	**Backdraft Damper.** Fan systems that exchange air between the conditioned space and outdoors must have backdraft or automatic dampers.
§ 150.0(m)8:	**Gravity Ventilation Dampers.** Gravity ventilating systems serving conditioned space must have either automatic or readily accessible, manually operated dampers in all openings to the outside, except combustion inlet and outlet air openings and elevator shaft vents.
§ 150.0(m)9:	**Protection of Insulation.** Insulation must be protected from damage due tosunlight, moisture, equipment maintenance, and wind. Insulation exposed to weather must be suitable for outdoor service (e.g., protected by aluminum, sheet metal, painted canvas, or plastic cover). Cellular foam insulation must be protected as above or painted with a water retardant and solar radiation-resistant coating.
§ 150.0(m)10:	**Porous Inner Core Flex Duct.** Porous inner cores of flex ducts must have a non-porous layer or air barrier between the inner core and outer vapor barrier.
§ 150.0(m)11:	**Duct System Sealing and Leakage Test.** When space conditioning systems use forced air duct systems to supply conditioned air to an occupiable space, the ducts must be sealed and duct leakage tested, as confirmed through field verification and diagnostic testing, in accordance with Reference Residential Appendix RA3.1.
§ 150.0(m)12:	**Air Filtration.** Space conditioning systems with ducts exceeding 10 feet and the supply side of ventilation systems must have MERV 13 or equivalent filters. Filters for space conditioning systems must have a two inch depth or can be one inch if sized per Equation 150.0-A. Clean-filter pressure drop and labeling must meet the requirements in §150.0(m)12. Filters must be accessible for regular service. Filter racks or grilles must use gaskets, sealing, or other means to close gaps around the inserted filters to and prevents air from bypassing the filter. *

5/6/22

residential mandatory measures summary; page 4

2022 Single-Family Residential Mandatory Requirements Summary

§ 150.0(m)13:	**Space Conditioning System Airflow Rate and Fan Efficacy.** Space conditioning systems that use ducts to supply cooling must have a hole for the placement of a static pressure probe, or a permanently installed static pressure probe in the supply plenum. Airflow must be ≥ 350 CFM per ton of nominal cooling capacity, and an air-handling unit fan efficacy ≤ 0.45 watts per CFM for gas furnace air handlers and ≤ 0.58 watts per CFM for all others. Small duct high velocity systems must provide an airflow ≥ 250 CFM per ton of nominal cooling capacity, and an air-handling unit fan efficacy ≤ 0.62 watts per CFM. Field verification testing is required in accordance with Reference Residential Appendix RA3.3. *

Ventilation and Indoor Air Quality:

§ 150.0(o)1:	**Requirements for Ventilation and Indoor Air Quality.** All dwelling units must meet the requirements of ASHRAE Standard 62.2, Ventilation and Acceptable Indoor Air Quality in Residential Buildings subject to the amendments specified in § 150.0(o)1. *
§ 150.0(o)1B:	**Central Fan Integrated (CFI) Ventilation Systems.** Continuous operation of CFI air handlers is not allowed to provide the whole-dwelling unit ventilation airflow required per §150.0(o)1C. A motorized damper(s) must be installed on the ventilation duct(s) that prevents all airflow through the space conditioning duct system when the damper(s) is closed andcontrolled per §150.0(o)1Biii&iv. CFI ventilation systems must have controls that track outdoor air ventilation run time, and either open or close the motorized damper(s) for compliance with §150.0(o)1C.
§ 150.0(o)1C:	**Whole-Dwelling Unit Mechanical Ventilation for Single-Family Detached and townhouses .** Single-family detached dwelling units, and attached dwelling units not sharing ceilings or floors with other dwelling units, occupiable spaces, public garages, or commercial spaces must have mechanical ventilation airflow specified in § 150.0(o)1Ci-iii.
§ 150.0(o)1G:	**Local Mechanical Exhaust.** Kitchens and bathrooms must have local mechanical exhaust; nonenclosed kitchens must have demand-controlled exhaust system meeting requirements of §150.0(o)1Giii,enclosed kitchens and bathrooms can use demand-controlled or continuous exhaust meeting §150.0(o)1Gii-iv. Airflow must be measured by the installer per §150.0(o)1Gv, and rated for sound per §150.0(o)1Gvi. *
§ 150.0(o)1H&I:	**Airflow Measurement and Sound Ratings of Whole-Dwelling Unit Ventilation Systems.** The airflow required per § 150.0(o)1C must be measured by using a flow hood, flow grid, or other airflow measuring device at the fan's inlet or outlet terminals/grilles per Reference Residential Appendix RA3.7. Whole-Dwelling unit ventilation systems must be rated for sound per ASHRAE 62.2 §7.2 at no less than the minimum airflow rate required by §150.0(o)1C.
§ 150.0(o)2:	**Field Verification and Diagnostic Testing.** Whole-Dwelling Unit ventilation airflow, vented range hood airflow and sound rating, and HRV and ERV fan efficacy must be verified in accordance with Reference Residential Appendix RA3.7. Vented range hoods must be verified per Reference Residential Appendix RA3.7.4.3 to confirm if it is rated by HVI or AHAM to comply with the airflow rates and sound requirements per §150.0(o)1G

Pool and Spa Systems and Equipment:

§ 110.4(a):	**Certification by Manufacturers.** Any pool or spa heating system or equipment must be certified to have all of the following: compliance with the Appliance Efficiency Regulations and listing in MAEDbS; an on-off switch mounted outside of the heater that allows shutting off the heater without adjusting the thermostat setting; a permanent weatherproof plate or card with operating instructions; and must not use electric resistance heating. *
§ 110.4(b)1:	**Piping.** Any pool or spa heating system or equipment must be installed with at least 36 inches of pipe between the filter and the heater, or dedicated suction and return lines, or built-in or built-up connections to allow for future solar heating.
§ 110.4(b)2:	**Covers.** Outdoor pools or spas that have a heat pump or gas heater must have a cover.
§ 110.4(b)3:	**Directional Inlets and Time Switches for Pools.** Pools must have directional inlets that adequately mix the pool water, and a time switch that will allow all pumps to be set or programmed to run only during off-peak electric demand periods.
§ 110.5:	**Pilot Light.** Natural gas pool and spa heaters must not have a continuously burning pilot light.
§ 150.0(p):	**Pool Systems and Equipment Installation.** Residential pool systems or equipment must meet the specified requirements for pump sizing, flow rate, piping, filters, and valves. *

Lighting:

§ 110.9:	**Lighting Controls and Components.** All lighting control devices and systems, ballasts, and luminaires must meet the applicable requirements of § 110.9. *
§ 150.0(k)1A:	**Luminaire Efficacy.** All installed luminaires must meet the requirements in Table 150.0-A, except lighting integral to exhaust fans, kitchen range hoods, bath vanity mirrors, and garage door openers; navigation lighting less than 5 watts; and lighting internal to drawers, cabinets, and linen closets with an efficacy of at least 45 lumens per watt.
§ 150.0(k)1B:	**Screw based luminaires.** Screw based luminaires must contain lamps that comply with Reference Joint Appendix JA8. *
§ 150.0(k)1C:	**Recessed Downlight Luminaires in Ceilings.** Luminaires recessed into ceilings must not contain screw based sockets, must be airtight, and must be sealed with a gasket or caulk. California Electrical Code § 410.116 must also be met.
§ 150.0(k)1D:	**Light Sources in Enclosed or Recessed Luminaires.** Lamps and other separable light sources that are not compliant with the JA8 elevated temperature requirements, including marking requirements, must not be installed in enclosed or recessed luminaires.
§ 150.0(k)1E:	**Blank Electrical Boxes.** The number of electrical boxes that are more than five feet above the finished floor and do not contain a luminaire or other device shall be no more than the number of bedrooms. These boxes must be served by a dimmer, vacancy sensor control, low voltage wiring, or fan speed control.
§ 150.0(k)1F:	**Lighting Integral to Exhaust Fans.** Lighting integral to exhaust fans (except when installed by the manufacturer in kitchen exhaust hoods) must meet the applicable requirements of § 150.0(k). *

5/6/22

residential mandatory measures summary; page 5

2022 Single-Family Residential Mandatory Requirements Summary

§ 150.0(k)1G:	**Screw based luminaires.** Screw based luminaires must contain lamps that comply with Reference Joint Appendix JA8. *
§ 150.0(k)1H:	**Light Sources in Enclosed or Recessed Luminaires.** Lamps and other separable light sources that are not compliant with the JA8 elevated temperature requirements, including marking requirements, must not be installed in enclosed or recessed luminaires.
§ 150.0(k)1I:	**Light Sources in Drawers, Cabinets, and Linen Closets.** Light sources internal to drawers, cabinetry or linen closets are not required to comply with Table 150.0-A or be controlled by vacancy sensors provided that they are rated to consume no more than 5 watts of power, emit no more than 150 lumens, and are equipped with controls that automatically turn the lighting off when the drawer, cabinet or linen closet is closed.
§ 150.0(k)2A:	**Interior Switches and Controls.** All forward phase cut dimmers used with LED light sources must comply with NEMA SSL 7A.
§ 150.0(k)2B:	**Interior Switches and Controls.** Exhaust fans must be controlled separately from lighting systems. *
§ 150.0(k)2A:	**Accessible Controls.** Lighting must have readily accessible wall-mounted controls that allow the lighting to be manually turned on and off. *
§ 150.0(k)2B:	**Multiple Controls.** Controls must not bypass a dimmer, occupant sensor, or vacancy sensor function if the dimmer or sensor is installed to comply with § 150.0(k).
§ 150.0(k)2C:	**Mandatory Requirements.** Lighting controls must comply with the applicable requirements of § 110.9.
§ 150.0(k)2D:	**Energy Management Control Systems.** An energy management control system (EMCS) may be used to comply with dimming, occupancy, and control requirements if it provides the functionality of the specified control per § 110.9 and the physical controls specified in § 150.0(k)2A.
§ 150.0(k)2E:	**Automatic Shutoff Controls.** In bathrooms, garages, laundry rooms, utility rooms and walk-in closets, at least one installed luminaire must be controlled by an occupancy or vacancy sensor providing automatic-off functionality. Lighting inside drawers and cabinets with opaque fronts or doors must have controls that turn the light off when the drawer or door is closed.
§ 150.0(k)2F:	**Dimmers.** Lighting in habitable spaces (e.g., living rooms, dining rooms, kitchens, and bedrooms) must have readily accessible wall-mounted dimming controls that allow the lighting to be manually adjusted up and down. Forward phase cut dimmers controlling LED light sources in these spaces must comply with NEMA SSL 7A.
§ 150.0(k)2K:	**Independent controls.** Integrated lighting of exhaust fans shall be controlled independently from the fans. Lighting under cabinets or shelves, lighting in display cabinets, and switched outlets must be controlled separately from ceiling-installed lighting.
§ 150.0(k)3A:	**Residential Outdoor Lighting.** For single-family residential buildings, outdoor lighting permanently mounted to a residential building, or to other buildings on the same lot, must have a manual on/off switch and either a photocell and motion sensor or automatic time switch control) or an astronomical time clock. An energy management control system that provides the specified control functionality and meets all applicable requirements may be used to meet these requirements.
§ 150.0(k)4:	**Internally illuminated address signs.** Internally illuminated address signs must either comply with § 140.8 or consume no more than 5 watts of power.
§ 150.0(k)5:	**Residential Garages for Eight or More Vehicles.** Lighting for residential parking garages for eight or more vehicles must comply with the applicable requirements for nonresidential garages in §§ 110.9, 130.0, 130.1, 130.4, 140.6, and 141.0.

Solar Readiness:

§ 110.10(a)1:	**Single-family Residences.** Single-family residences located in subdivisions with 10 or more single-family residences and where the application for a tentative subdivision map for the residences has been deemed complete and approved by the enforcement agency, which do not have a photovoltaic system installed, must comply with the requirements of § 110.10(b)-(e).
§110.10(b)1A:	**Minimum Solar Zone Area.** The solar zone must have a minimum total area as described below. The solar zone must comply with access, pathway, smoke ventilation, and spacing requirements as specified in Title 24, Part 9 or other parts of Title 24 or in any requirements adopted by a local jurisdiction. The solar zone total area must be comprised of areas that have no dimension less than 5 feet and are no less than 80 square feet each for buildings with roof areas less than or equal to 10,000 square feet or no less than 160 square feet each for buildings with roof areas greater than 10,000 square feet. For single-family residences, the solar zone must be located on the roof or overhang of the building and have a total area no less than 250 square feet. *
§ 110.10(b)2:	**Azimuth.** All sections of the solar zone located on steep-sloped roofs must have an azimuth between 90-300° of true north.
§ 110.10(b)3A:	**Shading.** The solar zone must not contain any obstructions, including but not limited to: vents, chimneys, architectural features, and roof mounted equipment. *
§ 110.10(b)3B:	**Shading.** Any obstruction located on the roof or any other part of the building that projects above a solar zone must be located at least twice the horizontal distance of the height difference between the highest point of the obstruction and the horizontal projection of the nearest point of the solar zone, measured in the vertical plane. *
§ 110.10(b)4:	**Structural Design Loads on Construction Documents.** For areas of the roof designated as a solar zone, the structural design loads for roof dead load and roof live load must be clearly indicated on the construction documents.
§ 110.10(c):	**Interconnection Pathways.** The construction documents must indicate: a location reserved for inverters and metering equipment and a pathway reserved for routing of conduit from the solar zone to the point of interconnection with the electrical service; and for single-family residences and central water-heating systems, a pathway reserved for routing plumbing from the solar zone to the water-heating system.
§ 110.10(d):	**Documentation.** A copy of the construction documents or a comparable document indicating the information from § 110.10(b)-(c) must be provided to the occupant.
§ 110.10(e)1:	**Main Electrical Service Panel.** The main electrical service panel must have a minimum busbar rating of 200 amps.
§ 110.10(e)2:	**Main Electrical Service Panel.** The main electrical service panel must have a reserved space to allow for the installation of a double pole circuit breaker for a future solar electric installation. The reserved space must be permanently marked as "For Future Solar Electric."

Electric and Energy Storage Ready:

5/6/22

residential mandatory measures summary; page 6

2022 Single-Family Residential Mandatory Requirements Summary

§ 150.0(s)	**Energy Storage System (ESS) Ready.** All single-family residences must meet all of the following: Either ESS-ready interconnection equipment with backed up capacity of 60 amps or more and four or more ESS supplied branch circuits, *or* a dedicated raceway from the main service to a subpanel that supplies the branch circuits in § 150.0(s); at least four branch circuits must be identified and have their source collocated at a single panelboard suitable to be supplied by the ESS, with one circuit supplying the refrigerator, one lighting circuit near the primary exit, and one circuit supplying a sleeping room receptacle outlet; main panelboard must have a minimum busbar rating of 225 amps; sufficient space must be reserved to allow future installation of a system isolation equipment/transfer switch within 3' of the main panelboard, with raceways installed between the panelboard and the switch location to allow the connection of backup power source.
§ 150.0(t)	**Heat Pump Space Heater Ready.** Systems using gas or propane furnaces to serve individual dwelling units must include: A dedicated unobstructed 240V branch circuit wiring installed within 3' of the furnace with circuit conductors rated at least 30 amps with the blank cover identified as "240V ready;" and a reserved main electrical service panel space to allow for the installation of a double pole circuit breaker permanently marked as "For Future 240V use."
§ 150.0(u)	**Electric Cooktop Ready.** Systems using gas or propane cooktop to serve individual dwelling units must include: A dedicated unobstructed 240V branch circuit wiring installed within 3' of the cooktop with circuit conductors rated at least 50 amps with the blank cover identified as "240V ready;" and a reserved main electrical service panel space to allow for the installation of a double pole circuit breaker permanently marked as "For Future 240V use."
§ 150.0(v)	**Electric Clothes Dryer Ready.** Clothes dryer locations with gas or propane plumbing to serve individual dwelling units must include: A dedicated unobstructed 240V branch circuit wiring installed within 3' of the dryer location with circuit conductors rated at least 30 amps with the blank cover identified as "240V ready;" and a reserved main electrical service panel space to allow for the installation of a double pole circuit breaker permanently marked as "For Future 240V use."

*Exceptions may apply.

5/6/22

residential mandatory measures summary; page 7

HVAC SYSTEM HEATING AND COOLING LOADS SUMMARY

Project Name: Heliotrope Duplex-Unit B Residence — Date: 5/2/2023
System Name: HVAC -Heat Pump #1 — Floor Area: 395

ENGINEERING CHECKS	
Number of Systems	1
Heating System	
Output per System	66,000
Total Output (Btuh)	66,000
Output (Btuh/sqft)	167.1
Cooling System	
Output per System	60,000
Total Output (Btuh)	60,000
Total Output (Tons)	5.0
Total Output (Btuh/sqft)	151.9
Total Output (sqft/Ton)	79.0
Air System	
CFM per System	2,000
Airflow (cfm)	2,000
Airflow (cfm/sqft)	5.06
Airflow (cfm/Ton)	400.0
Outside Air (%)	0.0%
Outside Air (cfm/sqft)	0.00

Note: values above given at ARI conditions

SYSTEM LOAD	Coil Cooling Peak CFM	Coil Cooling Peak Sensible	Coil Cooling Peak Latent	Coil Htg. Peak CFM	Coil Htg. Peak Sensible
Total Room Loads	165	3,554	346	151	6,034
Return Vented Lighting		0			
Return Air Ducts		42			78
Return Fan		0			0
Ventilation	0	0	0	0	0
Supply Fan		0			0
Supply Air Ducts		42			78
TOTAL SYSTEM LOAD		3,639	346		6,191
HVAC EQUIPMENT SELECTION					
5-TON PUMY-P60NKMU3(-BS		53,506	5,388		50,489
Total Adjusted System Output (Adjusted for Peak Design conditions)		53,506	5,388		50,489
TIME OF SYSTEM PEAK		Aug 3 PM			Jan 1 AM

HEATING SYSTEM PSYCHROMETRICS (Airstream Temperatures at Time of Heating Peak)

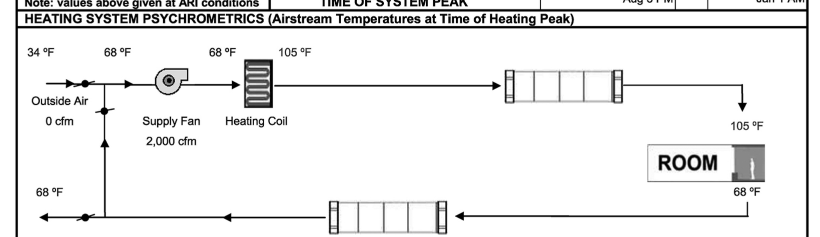

COOLING SYSTEM PSYCHROMETRICS (Airstream Temperatures at Time of Cooling Peak)

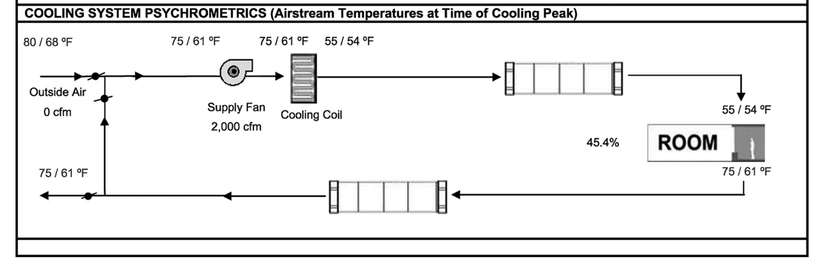

residential mandatory measures summary; page 8

HVAC SYSTEM HEATING AND COOLING LOADS SUMMARY

Project Name: Heliotrope Duplex-Unit B Residence — Date: 5/2/2023
System Name: HVAC Heat Pump #2 — Floor Area: 1,342

ENGINEERING CHECKS	
Number of Systems	1
Heating System	
Output per System	66,000
Total Output (Btuh)	66,000
Output (Btuh/sqft)	49.2
Cooling System	
Output per System	60,000
Total Output (Btuh)	60,000
Total Output (Tons)	5.0
Total Output (Btuh/sqft)	44.7
Total Output (sqft/Ton)	268.4
Air System	
CFM per System	2,000
Airflow (cfm)	2,000
Airflow (cfm/sqft)	1.49
Airflow (cfm/Ton)	400.0
Outside Air (%)	0.0%
Outside Air (cfm/sqft)	0.00

Note: values above given at ARI conditions

SYSTEM LOAD	Coil Cooling Peak CFM	Coil Cooling Peak Sensible	Coil Cooling Peak Latent	Coil Htg. Peak CFM	Coil Htg. Peak Sensible
Total Room Loads	667	14,341	1,175	328	13,074
Return Vented Lighting		0			
Return Air Ducts		171			170
Return Fan		0			0
Ventilation	0	0	0	0	0
Supply Fan		0			0
Supply Air Ducts		171			170
TOTAL SYSTEM LOAD		14,682	1,175		13,414
HVAC EQUIPMENT SELECTION					
5-TON PUMY-P60NKMU3(-BS		53,248	5,795		50,489
Total Adjusted System Output (Adjusted for Peak Design conditions)		53,248	5,795		50,489
TIME OF SYSTEM PEAK		Aug 3 PM			Jan 1 AM

HEATING SYSTEM PSYCHROMETRICS (Airstream Temperatures at Time of Heating Peak)

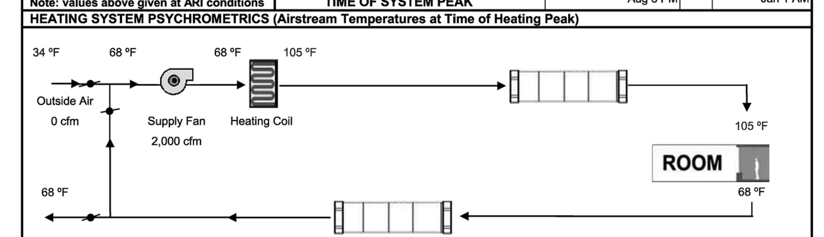

COOLING SYSTEM PSYCHROMETRICS (Airstream Temperatures at Time of Cooling Peak)

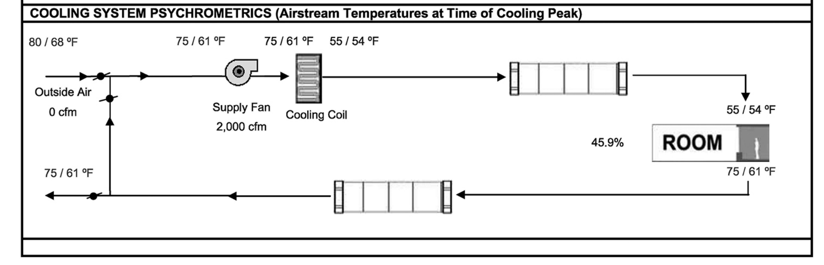

residential mandatory measures summary; page 9

22 may 2023
ⓒ copyright 2023
job #2117

eric aust
architect
62 balboa coves
newport beach, california 92663
tel 949.637.5220

client:
JRC real estate development
14930 alondra blvd.
la mirada, california 90638
tel 562.623.9328

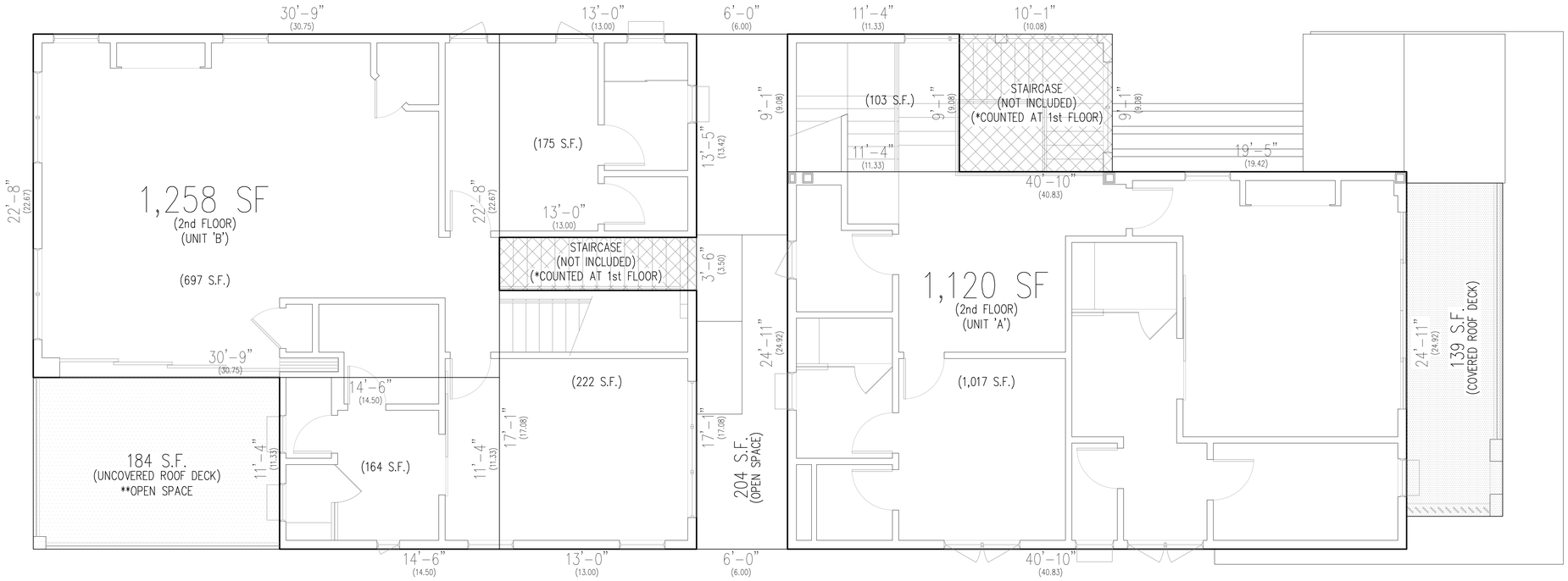

2 2nd floor area analysis

A0.7 SCALE: 1/4" = 1'-0"

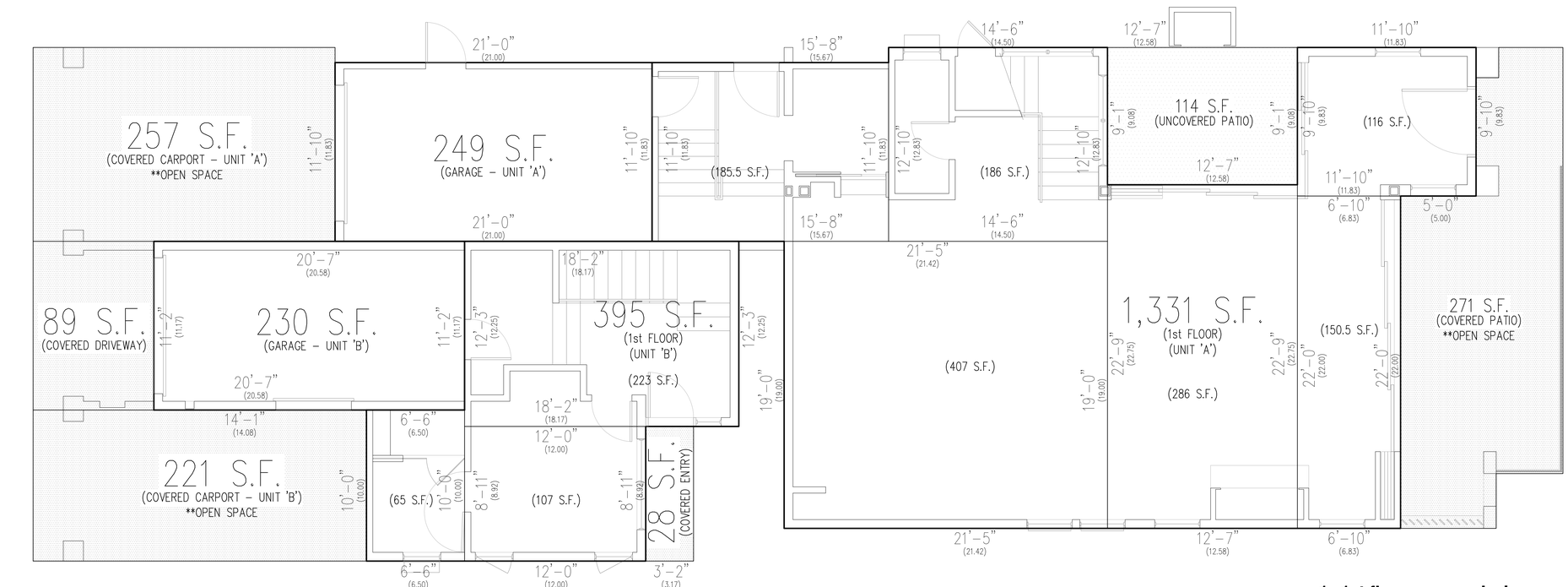

1 1st floor area analysis

A0.7 SCALE: 1/4" = 1'-0"

a0.7

1st + 2nd floor area analysis plans
1/4"=1'-0"

heliotrope duplex

407 heliotrope avenue
corona del mar, california
92625

project area analysis

4,720 s.f. lot area

3,332 s.f. buildable lot area

1.5 x 3,332=4,998 s.f. allowable

project area analysis

1,331 s.f. 1st floor - UNIT 'A' (livable)
395 s.f. 1st floor - UNIT 'B' (livable)
1,120 s.f. 2nd floor - UNIT 'A' (livable)
1,258 s.f. 2nd floor - UNIT 'B' (livable)
290 s.f. 3rd floor - UNIT 'A' (livable)
+ 84 s.f. 3rd floor - UNIT 'B' (livable)

4,478 s.f. total livable
(2,741 S.F. - UNIT 'A')
(1,737 S.F. - UNIT 'B')

249 s.f. garage - UNIT 'A'
230 s.f. garage - UNIT 'B'

4,957 s.f. total floor area
(148 S.F. UNDER 41 S.F. ALLOWABLE)

2
open space provided
271 s.f. 1st floor (at front porch)
221 s.f. 1st floor (unit 'B' carport)
257 s.f. 1st floor (unit 'A' carport)
204 s.f. 2nd floor (at space between units)
+ 184 s.f. 2nd floor (at 2nd floor patio)
1,137 s.f. total open space (500 req'd)

2 CITY CORRECTIONS
08 DECEMBER 2023

LICENSED ARCHITECT
ERIC D. AUST
C-29374
31 MAY 2025
RENEWAL DATE
STATE OF CALIFORNIA

0 1' 2' 4' 8' north

22 may 2023

© copyright 2023

job #2117

eric aust
architect
62 balboa coves
newport beach, california 92663
tel 949.637.5220

client:
JRC real estate development
14930 alondra blvd.
la mirada, california 90638
tel 562.623.9328

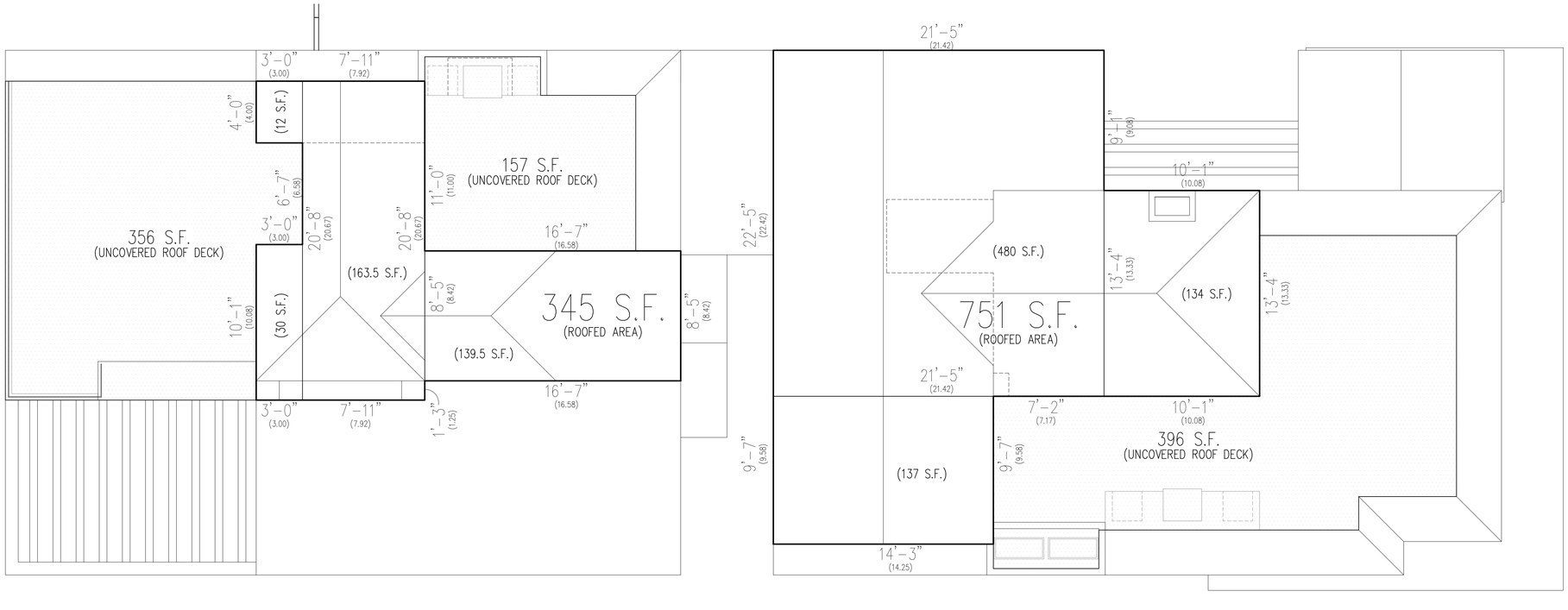

4 roof area analysis

A0.8 SCALE: 1/4" = 1'-0"

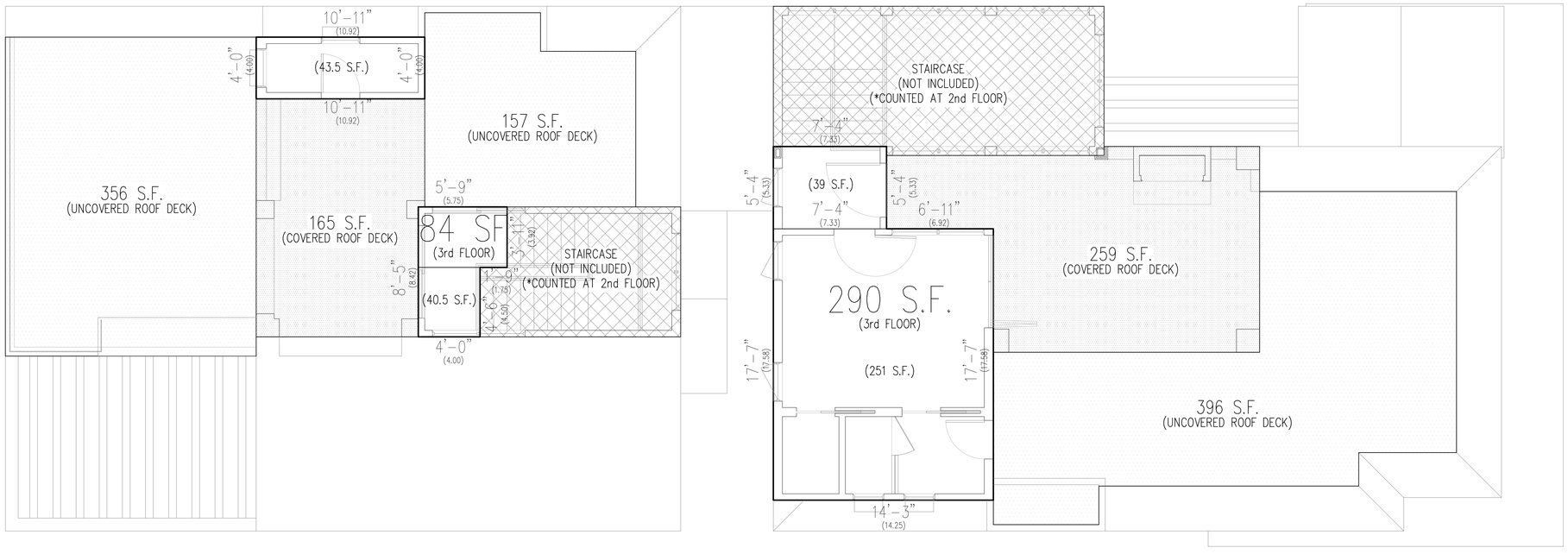

3 3rd floor area analysis

A0.8 SCALE: 1/4" = 1'-0"

a0.8

3rd floor area analysis plan
1/4"=1'-0"

heliotrope duplex

407 heliotrope avenue
corona del mar, california
92625

project area analysis

4,720 s.f. lot area

3,332 s.f. buildable lot area

1.5 x 3,332=4,998 s.f. allowable

project area analysis

1,331 s.f. 1st floor - UNIT 'A' (livable)
395 s.f. 1st floor - UNIT 'B' (livable)
1,120 s.f. 2nd floor - UNIT 'A' (livable)
1,258 s.f. 2nd floor - UNIT 'B' (livable)
290 s.f. 3rd floor - UNIT 'A' (livable)
+ 84 s.f. 3rd floor - UNIT 'B' (livable)

4,478 s.f. total livable
(2,741 S.F. - UNIT 'A')
(1,737 S.F. - UNIT 'B')

249 s.f. garage - UNIT 'A'
230 s.f. garage - UNIT 'B'

4,957 s.f. total floor area
(148 S.F. UNDER 41 S.F. ALLOWABLE)

ALLOWABLE 3rd FLOOR AREA:
ALLOWABLE AREA SHALL BE 15% OF BUILDABLE LOT AREA
3,332 S.F. BUILDABLE LOT x 0.15 = 500 S.F. MAX. 3rd FLOOR AREA

374 S.F. 3rd FLOOR AREA <= 500 S.F. ALLOWABLE = O.K.

ALLOWABLE 3rd FLOOR ROOFED AREA:
ALLOWABLE AREA SHALL BE 50% OF BUILDABLE LOT AREA
3,332 S.F. BUILDABLE LOT x 0.50 = 1,666 S.F. MAX. 3rd FLOOR ROOFED AREA

1,096 S.F. 3rd FLOOR ROOFED AREA <= 1,666 S.F. ALLOWABLE = O.K.

2

open space provided

271 s.f. 1st floor (at front porch)
221 s.f. 1st floor (unit 'B' carport)
257 s.f. 1st floor (unit 'A' carport)
204 s.f. 2nd floor (at space between units)
+ 184 s.f. 2nd floor (at 2nd floor patio)
1,137 s.f. total open space (500 req'd)

2 CITY CORRECTIONS
08 DECEMBER 2023

LICENSED ARCHITECT
ERIC D. AUST
C-29374
31 MAY 2025
RENEWAL DATE
STATE OF CALIFORNIA

0 1' 2' 4' 8' north

22 may 2023
© copyright 2023
job #2117

eric aust
architect
62 balboa coves
newport beach, california 92663
tel 949.637.5220

client:
JRC real estate development
14930 alondra blvd.
la mirada, california 90638
tel 562.623.9328

CITY OF NEWPORT BEACH

COMMUNITY DEVELOPMENT DEPARTMENT
BUILDING DIVISION
100 Civic Center Drive | P.O. Box 1768 | Newport Beach, CA 92658-8915
www.newportbeachca.gov | (949) 644-3200

RESIDENTIAL CONSTRUCTION MINIMUM REQUIREMENTS

Applicable Standards: 2022 California Residential Code (CRC); 2022 California Building Code (CBC); 2022 California Plumbing Code (CPC); 2022 California Electrical Code (CEC); 2022 California Mechanical Code (CMC); 2022 Building Energy Efficiency Standards (BEES); 2022 California Green Building Standards Code (Cal Green); & Chapter 15 of the Newport Beach Municipal Code (NBMC)

GENERAL:

1. Residential building undergoing permitted alterations, additions or improvements shall replace non-compliant plumbing fixtures with water-conserving plumbing fixtures meeting the requirements of 2022 California Green Building Standards Code, Section 4.303.1 Plumbing fixture replacement is required prior to issuance of a certificate of occupancy or final inspection by the Chief Building Official. (Civil Code, Section 1101.1 et seq., NBMC 15.11.010)
2. Issuance of a building permit by the City of Newport Beach does not relieve applicants of the legal requirements to observe covenants, conditions and restrictions, which may be recorded against the property or to obtain plans. You should contact your community associations prior to commencement of any construction authorized by this permit.
3. Prior to performing any work in the city right-of-way an encroachment permit must be obtained from the Public Works Department.
4. A site survey by a licensed surveyor shall be required prior to foundation concrete pour.
5. Garage ceiling height. The minimum unobstructed vertical clearance for parking spaces shall be seven feet, except that the front four feet may have a minimum vertical clearance of four feet. (NBMC 20.40.090 A 4)
6. Utilize one of the city's approved franchise hauler to recycle and/or salvage a minimum of 65% of the nonhazardous construction and demolition waste. (Cal Green 4.408.1, 4.408.3)
7. Stairways shall not be less than 36 inches clear width. (CRC 311.7.1) The minimum head clearance shall be 6'-8" measured vertically from the sloped line adjoining tread nosing. (CRC 311.7.2)
8. Advisory Note: Homeowners Association (HOA) approval is independent of the City process and may be required for this improvement. Please check with the HOA Board.
9. Additional permits are required for detached structures including but not limited to:
   a. Accessory structures, detached patio covers, and trellises,
   b. Masonry or concrete fences over 3.5 ft. high or within 3 feet of the property line,
   c. Retaining walls over 4 ft. high from the bottom of the foundation to the top of the wall and any retaining wall within 3 ft. of property line regardless of height.

   d. Electrical and Plumbing for exterior improvements detached from the house (i.e. barbeque, fountain, fire feature)

CONSTRUCTION:

10. Pedestrian protection adjacent to public way to be as follows:

CBC TABLE 3306.1
PROTECTION OF PEDESTRIANS

HEIGHT OF CONSTRUCTION	DISTANCE FROM CONSTRUCTION TO LOT LINE	TYPE OF PROTECTION REQUIRED
8 feet or less	Less than 5 feet	Construction railings
	5 feet or more	None
More than 8 feet	Less than 5 feet	Barrier and covered walkway
	5 feet or more, but not more than one-fourth the height of construction	Barrier and covered walkway
	5 feet or more, but between one-fourth and one-half the height of construction	Barrier
	5 feet or more, but exceeding one-half the height of construction	None

11. All exterior lath and plaster shall have two layers of 10-minute Grade D paper over wood-based sheathing. (CRC R703.7.3, CBC 2510.6)
12. Wall covering of showers or tubs with showers shall be of cement plaster, tile, or approved equal, to a height of not less than 72 inches above drain inlet. Backing for tile shall be cement board or cement plaster. (CRC R307.2, CBC 1209.2.3)
13. Safety glazing shall be provided at the following hazardous locations: (CRC R308.4, CBC 2406.4)
   a. Swinging, bi-fold, and sliding doors.
   b. When located within 60 inches above the floor of wet surfaces such as tubs, showers, saunas, steam rooms, or outdoor swimming pool.
   c. Glazing adjacent to doors:
      i. Within a 24-inch arc of either vertical edge of doors or within 60 inches of walking surface.
      ii. Where the glazing is on a wall perpendicular to the plane of the door in a closed position and within 24 inches of the hinge side of an in-swinging door.
   d. Where glazing area is more than 9 sq. ft. in area, with the bottom edge less than 18 inches above the floor, top edge more than 36 inches above floor, and within 36 inches of a walking surface, measured horizontally.
   e. Glazing where the bottom exposed edge of the glazing is less than 36 inches above the plane of the adjacent walking surface of stairways, landings between flights of stairs and ramps.
   f. Glazing adjacent to the landing at the bottom of a stairway where the glazing is less than 36 inches above the landing and within 60 inches horizontally of the bottom tread.
   g. Glazing in guards and railings.
14. All doors from the house into the pool area shall be equipped with an approved alarm or an approved alternate drowning prevention safety feature. (CBC 3109 (115922))
15. Smoke alarms shall be installed in the following locations (CRC R314.3, CBC 907.2.11.2, 907.2.11.3 & 907.2.11.4):

   a. In each sleeping room.
   b. Outside each separate sleeping area in the immediate vicinity of the bedrooms.
   c. On each additional story, including basements and habitable attics.
   d. Not less than 3 feet horizontally from the door or opening of a bathroom that contains a bathtub or shower.
   e. A minimum of 20 feet horizontally from any permanently installed cooking appliance.
   f. Smoke alarms shall be hardwired with battery back-up and interconnected unless exempted in accordance with CRC R314.4 & R314.5 or CBC 907.2.11.5 & 907.2.11.6.
16. Carbon monoxide alarms shall be installed in the following locations (CRC R315.3):
   a. Outside of each sleeping area in the immediate vicinity of the bedroom(s).
   b. On every occupiable level of the dwelling unit including basements.
   c. Where a fuel-burning appliance is located within a bedroom or its attached bathroom, a carbon monoxide alarm shall be installed within the bedroom.

   Carbon monoxide alarms shall be hardwired with battery back-up and interconnected unless exempted in accordance with CRC R315.6(4).
17. Electrical receptacle outlets, switches and controls shall be located no more than 48" measured from the top of the outlet box and not less than 15" measured from the bottom of the outlet box above the finish floor. CRC R327.1.2
18. Doorbell buttons shall not be installed more than 48" above exterior floor or landing. CRC R327.1.4
19. All fenestrations on windows and doors shall have U-factors (0.30 max) and Solar Heat Gain Coefficient (SHGC=0.23 max) values in accordance with T-24 energy calculations. All fenestrations must have temporary and permanent labels.

TEMPORARY GENERATOR:

20. Hand operated construction tools powered by electricity must use power provided by Southern California Edison through a temporary pole or available outlet. In the rare case where electricity is not readily available and a portable temporary generator is necessary, then the following restrictions must be adhered to:
   a. Must be portable and may be easily relocated.
   b. Temporary generators are to be located a minimum distance from any property line according to the following table:

Time in Use Hours	Required Setback from Property Line	Required Setback from Adjacent Structures
0 – 1 day	10 feet	5 feet
> 1 day	20 feet	5 feet

   c. If the minimum distance cannot be achieved, then the generator shall be located the most extreme distance practical to inhibit noise. Other methods to inhibit noise may be utilized when practical.

   d. May be operational for a maximum of five consecutive calendar days. After five consecutive calendar days of use, power shall be provided using a temporary power pole.
   e. Usage is limited to weekdays between the hours from 8:00 AM and 3:30 PM Monday through Friday. No use on the weekends or federal holidays.

FIREPLACE:

19. All fireplaces:
   a. Factory-built fireplaces, chimneys and all their components shall be listed and installed in accordance with their listing and manufacturer's installation instructions. (CRC R1004.1)
   b. Factory built wood burning fireplaces shall be qualified at the U.S. EPA's Voluntary Fireplace Program Phase 2 emissions level. (CRC 1004.1.1)
   c. Decorative shrouds shall not be installed at the termination of factory-built chimneys except where such shrouds are listed and labeled for use with the specific factory-built chimney system and are installed in accordance with manufacturer's installation instructions. (CRC R1005.2 & CMC 802.5.1.1 & CMC 802.5.4.3)
   d. Horizontal openings are not allowed, for exhaust vents, in walls closer than 3 feet to a property line. (Tables R302.1(1) & (2)). Horizontal vent caps shall be 2 feet clear from property lines.
   e. Exhaust openings shall not be directed onto walkways. (R303.5.2)
20. Solid fuel burning fireplaces:
   a. Provide a permanently anchored gaseous fuel burning pan to the firebox of a solid fuel burning fireplace.
   b. Solid fuel burning fireplace must comply with the California Energy Standards mandatory measures.
   c. Chimney shall extend at least 2 ft. higher than any portion of the building within 10 ft. but shall not be less than 3 ft. above the highest point where the chimney passes through the roof. (CRC R1003.9)
   d. Liquid fueled fireplaces are not allowed for interior use.
21. Direct vent gas appliance fireplace:
   a. Direct vent sealed-combustion gas appliance fireplace must comply with the Cal Green code requirements and must comply with US EPA New Source Performance Standards (NSPS). (Cal Green 4.503.1)

MECHANICAL:

22. Rooms containing bathtubs, showers, spas and similar fixtures shall be provided with an exhaust fan with humidity control sensor having a minimum capacity of 50 CFM ducted to terminate outside the building. (CRC R303.3, Cal Green 4.506.1, CBC 1202.5.2.1, CMC 402.5)
23. Where water closet compartment is independent of the bathroom or shower area, a fan will be required in each area. Bathrooms shall have an exhaust fan with humidity control sensor, min. 50 CFM capacity. (CRC R303.3)
24. Where whole house fans are used in bathroom areas, the fan must run continuously and shall not be tied to a humidity control sensor. (Cal Green 4.506.1(2)).
25. The clothes dryer vent shall not exceed 14 ft. in overall length with maximum two 90-degree elbows. (CMC 504.4.2.1)
26. Environmental air ducts shall terminate min. 3 feet from property line or openings into building, and 10 feet from a forced air inlet. (CMC 502.2.1)

27. Mechanical equipment shall be installed per the manufacture's installation instructions. (CMC 303.1)
28. Domestic range vents to be smooth metallic interior surface. (CMC 504.3)
29. Supply and return air ducts to be insulated at a minimum of R-6. (Cal Energy Code Table 150.1-A.)

PLUMBING:

30. Separate water meters are required for all new duplexes. Separate fire risers are required at each water meter.
31. Plumbing Fixtures:
   a. New Construction & Addition/Alterations that increases condition space area, volume, or size (Cal Green 4.303.1):
      i. Comply with CAL Green Mandatory Requirements
   b. Addition & Alteration: Existing fixtures shall be replaced to meet the following requirements:
      i. Shower Heads: 1.8 gpm @ 80 psi
      ii. Lavatory Faucets: 1.2 gpm @ 60 psi
      iii. Kitchen Faucets: 1.8 gpm @ 60 psi
      iv. Water Closet: 1.28 gallons per flush
32. Clearance for water closet to be a minimum of 24 inches in front, and 15 inches from its center to any side wall or obstruction. (CPC 402.5)
33. The water heater burner to be at least 18 inches above the garage floor, if located in a garage. (CPC 507.13)
34. Install a 3-inch diameter by 3 ft. tall steel pipe embedded in concrete slab for protection of water heaters located in garage. (CPC 507.13.1)
35. Water heaters to be strapped at top and bottom with 1 ½" x 16-gauge strap with 3/8" diameter. X 3" lag bolt each end. (CPC 507.2)
36. ABS and PVC drain waste and vent piping material is limited to 2 stories maximum. (CPC 701.2(2) (a). and 903.1.1)
37. ABS and PVC roof and deck drain material is limited to 2 stories maximum. (CPC 1101.4)
38. Roof and deck drain systems inside the building are required to be installed with directional DWV drainage fittings. (CPC 1101.4 and & 706.0)
39. Cleanouts are required within 2 feet of the connection between the building interior roof/deck drain piping system and the exterior onsite storm drain system. (CPC 1101.13)
40. All hose bibbs shall have vacuum breakers. (CPC 603.5.7)
41. The maximum amount of water closets on a 3-inch horizontal drainage system line is 3. (CPC Table 703.2)
42. The maximum amount of water closets on a 3-inch vertical drainage system line is 4. (CPC Table 703.2)
43. Provide a condensate drain no more than 2 inches above the base of the water heater space. (Cal Energy Code 150.0 (n))
44. Insulate all hot water pipes. (Cal Energy Code 150.0 (j) (1), and CPC 609.12).

45. Isolation valves are required for tankless water heaters on the hot and cold supply lines with hose bibbs on each valve, to flush the heat exchanger. (Cal Energy Code 110.3 (6))
46. Install 1 automatic clothes washer connection per one- and two-family dwelling. (CPC Table 422.1)

ELECTRICAL:

47. Electrical service shall be underground for new construction, replacement building, or addition to an existing building exceeds fifty (50) percent of the gross floor area of the existing building. (NBMC 15.32.015)
48. Edison Company approval is required for meter location prior to installation.
49. Field inspectors shall review and approve underground service requirement prior to concrete placement.
50. Service equipment and subpanels shall have a min 30" wide by 36" deep clear work space. (CEC 110.26)
51. All lighting is required shall be high efficacy. (California energy code section 150.0 (k) and Table 150.0-A.)
52. Provide a listed 1-inch raceway to accommodate a dedicated 208/240-volt circuit for future electrical vehicle (EV) charger. (Cal Green 4.106.4.1)
53. All receptacle outlets are required shall be listed tamper resistant (CEC 406.12 and 250.52)
54. Combination type AFCI circuit breakers are required for all 120-volt single phase 15/20 amp branch circuits. Except for bathrooms, garages, and outdoors. (CEC 210.12)
55. A minimum of one dedicated 20 amp circuit is required for a bathroom. (CEC 210.11(C)(3))
56. GFCI protection is required for all receptacle outlets located outdoors, garages, accessory buildings, bathrooms, crawl spaces, kitchens, laundry areas, kitchen dishwasher branch circuit, garbage disposal, all areas within 6 feet of a sink, and all receptacles within 6 feet of a bathtub or shower stall. (CEC 210.8)
57. Receptacle outlets are not allowed within or over a bathtub or shower stall. (CEC 406.9 (C))
58. Subpanels are not allowed to be located in bathrooms or clothes closets. Avoid installing sub-panels in fire wall envelope unless the panel is listed, or fire protection is clearly detailed to the satisfaction of the building official. (CEC 240.24 (D) and (E)
59. Circuits sharing a grounded conductor (neutral) with two ungrounded (hot) conductors must use a two-pole circuit breaker or an identified handle tie. Group non-cable circuits in panel. (CEC 210.4(B)) (CEC 210.4(D))
60. The receptacle outlets that serve kitchen counter tops, dining room, breakfast area, and pantry, must have a min of 2 dedicated 20 amp circuits. (CEC 210.52 (B)(1))
61. Kitchen counter tops 12 inches or wider must have a receptacle outlet. (CEC 210.52(C)(1))
62. Kitchen counter tops must have receptacle outlets so no point along the counter walls is more than 24 inches from a receptacle. (CEC 210.52 (C)(1))
63. Island and peninsular counter tops must have at least one receptacle. (CEC 210.52(C)(1), (2),and (3))
64. The spacing for general receptacle outlets must be located so that no point on any wall, fixed glass, or cabinets is over 6 feet from a receptacle outlet. (CEC 210.52(A)(1))

65. Hallways 10 feet or more must have at least one receptacle outlet. (CEC 210.52(H))
66. Garages shall have at least one receptacle for each car space on the interior. The branch circuit supplying the receptacles shall not serve outlets outside of the garage. (CEC 210.52 (G) (1)).
67. Laundry rooms must have at least one dedicated 20 amp receptacle circuit. (CEC 210.11(C) (2)).
68. Provide 120V receptacle within 3 feet of water heater. (Cal Energy Code 150.0 (n) 1 A.)

FOUNDATION:

69. Weep screed for stucco at the foundation plate line shall be a minimum of 4 inches above the earth or 2 inches above paved areas. (CRC R703.7.2.1, CBC 2512.1.2)
70. Fasteners and connectors (nails, anchor bolts, etc.) in contact with preservative-treated wood shall be of hot-dipped zinc-coated galvanized steel, stainless steel, silicon bronze or copper. (CRC R317.3, CBC 2304.10.6)
71. Anchor bolts shall include steel plate washers, a minimum of 0.229" x 3" x 3" in size, between sill plate and nut. (CRC R602.11.1, CBC 2308.3, Acceptable alternate SDPWS 4.3.6.4.3)

1 CITY CORRECTIONS 16 OCTOBER 2023

LICENSED ARCHITECT
ERIC D. AUST
C-29374
31 MAY 2025
RENEWAL DATE
STATE OF CALIFORNIA

22 may 2023

© copyright 2023

job #2117

eric aust
architect
62 balboa coves
newport beach, california 92663
tel 949.637.5220

client:
JRC real estate development
14930 alondra blvd.
la mirada, california 90638
tel 562.623.9328

1

a0.9

city standard residential construction minimum requirements

heliotrope duplex

407 heliotrope avenue
corona del mar, california
92625

CITY OF NEWPORT BEACH

COMMUNITY DEVELOPMENT DEPARTMENT
BUILDING DIVISION
100 Civic Center Drive | P.O. Box 1768 | Newport Beach, CA 92658-8915
www.newportbeachca.gov | (949) 644-3200

2022 CALGREEN - RESIDENTIAL MINIMUM REQUIREMENTS

Scope

1. 2022 California Green Building Standards Code (CG) is applicable to all new residential buildings, including but not limited to, dwellings, apartment houses, condominiums, hotels, and other types of dwellings containing sleeping accommodations with or without common toilets or cooking facilities regulated by the Department of Housing and Community Development (HCD-1). (NBMC 15.11.010, CG Section 101.3.1(3)).
2. 2022 California Green Building Standards Code (CG) is applicable to additions or alterations of existing residential buildings where the addition or alteration increases the building's conditioned area, volume, or size. The requirements shall apply only to and/or within the specific area of the addition or alteration. (301.1.1)

Energy Efficiency

3. New one- and two-family dwellings and townhouses with attached private garages shall install a listed nominal 1 inch inside diameter raceway to accommodate a dedicated 208/240 volt branch circuit. (4.106.4.1)
   a. The raceway shall originate at the main service or subpanel and terminate into a listed cabinet, box, or enclosure in close proximity to the proposed location of an EV charger.
   b. The service panel or subpanel shall provide capacity to install a minimum 40 ampere dedicated branch circuit and space reserved for installation of a branch circuit overcurrent protective device.
   c. The service panel or subpanel circuit directory shall identify the overcurrent protective devices space reserved for future EV charging as "EV CAPABLE."
   d. The raceway termination location shall be permanently and visibly marked as "EV CAPABLE."

Material Conservation and Resources Efficiency

4. Annular spaces around pipes, electric cables, conduits, or other openings in sole/bottom plates at exterior walls shall be protected against the passage of rodents by closing such openings with cement mortar, concrete masonry or other similar method. (4.406.1)
5. Utilize one of the city's approved franchise hauler to recycle and/or salvage a minimum of 65% of the nonhazardous construction and demolition waste. (4.408.1, 4.408.3)

Water Efficiency and Conservation

6. New residential developments shall comply with City's water efficient landscape ordinance. (4.304.1, NBMC 14.17)
7. Plumbing fixtures and fittings shall comply with the following (4.303.1):

FIXTURE TYPE	MAXIMUM FLOW RATE
Single Showerheads	1.8 gpm @ 80 psi
Multiple Showerheads	Combine flow rate of 1.8 gpm @80 psi
Residential Lavatory Faucets	1.2 gpm @ 60 psi[2]
Common and Public use Lavatory Faucets	0.5 gpm @ 60 psi
Kitchen Faucets	1.8 gpm @ 60 psi
Metering Faucets	0.2 gallons per cycle maximum
Water Closets	1.28 gallons/flush[1]
Wall Mounted Urinal	0.125 gallons/flush
All Other Types of Urinal	0.5 gallons/flush

1. Includes single and dual flush water closets with an effective flush rate of 1.28 gallons or less when tested per ASME A122.19.233.2 for single flush and ASME A112.19.14 for dual flush toilets.
2. Lavatory faucets shall not have a flow rate less than 0.8 gpm at 20 psi.

Environmental Quality

8. Moisture content of building materials used in wall and floor framing is checked before enclosure according to one of the following (4.505.3):
   a. Moisture content shall be determined with either a probe-type or contact-type moisture meter. Equivalent moisture verification methods may be approved by the enforcing agency and shall satisfy requirements found in Section 101.8 of this code.
   b. Moisture readings shall be taken at a point 2 feet (610 mm) to 4 feet (1219 mm) from the grade stamped end of each piece to be verified.
   c. At least three random moisture readings shall be performed on wall and floor framing with documentation acceptable to the enforcing agency provided at the time of approval to enclose the wall and floor framing.
9. Aerosol paints and coatings shall meet the Product-weighted MIR Limits for ROC in Section 94522(a)(2) and other toxic requirements in Sections 94522(e)(1) and (f)(1) of the California Code of Regulations, Title 17, commencing with Section 94520. (4.504.2.3)
10. Carpet and carpet systems shall be compliant with one of the following (4.504.3):
    a. Carpet and Rug Institute's Green Label Plus Program.
    b. California Department of Public Health Specification 01350.
    c. NSF/ANSI 140 at the Gold level.
    d. Scientific Certifications Systems Indoor Advantage™ Gold
11. Minimum 80% of floor area receiving resilient flooring shall comply with one of the following (4.504.4):
    a. VOC emission limits defined in the Collaborative for High Performance Schools (CHPS) High Performance Product Database.
    b. Products certified under UL GREENGUARD Gold.
    c. Certified under the Resilient Floor Covering Institute (RFCI) FloorScore program.
    d. California Department of Public Health Specification 01350.

12. Adhesives, sealants and caulks shall be compliant with volatile organic compound (VOC) limits set forth in Table 4.504.1 or Table 4.504.2. (4.504.2.1)

ADHESIVE VOC LIMIT [1,2] (Less Water and Less Exempt Compounds in Grams per Liter)	
ARCHITECTURAL APPLICATIONS	**VOC LIMIT**
Indoor carpet adhesives	50
Carpet pad adhesives	50
Outdoor carpet adhesives	150
Wood flooring adhesive	100
Rubber floor adhesives	60
Subfloor adhesives	50
Ceramic tile adhesives	65
VCT and asphalt tile adhesives	50
Drywall and panel adhesives	50
Cove base adhesives	50
Multipurpose construction adhesives	70
Structural glazing adhesives	100
Single-ply roof membrane adhesives	250
Other adhesives not specifically listed	50
SPECIALTY APPLICATIONS	
PVC welding	510
CPVC welding	490
ABS welding	325
Plastic cement welding	250
Adhesive primer for plastic	550
Contact adhesive	80
Special purpose contact adhesive	250
Structural wood member adhesive	140
Top and trim adhesive	250
SUBSTRATE SPECIFIC APPLICATIONS	
Metal to metal	30
Plastic foams	50
Porous material (except wood)	50
Wood	30
Fiberglass	80

1. If an adhesive is used to bond dissimilar substrates together, the adhesive with the highest VOC content shall be allowed.
2. For additional information regarding methods to measure VOC content specified in table, see South Coast Air Quality Management District Rule 1168.

SEALANT VOC LIMIT (Less Water and Less Exempt Compounds in Grams per Liter)	
SEALANTS	**VOC LIMIT**
Architectural	250
Marine deck	760
Nonmembrane roof	300
Roadway	250
Single-ply roof membrane	450
Other	420
SEALANT PRIMERS	
Architectural	
Nonporous	250
Porous	775
Modified bituminous	500
Marine deck	760
Other	750

13. Paints, stains, and other coatings shall be compliant with VOC and other toxic compound limits set forth in Table 4.504.3. (4.504.2.2)

VOC CONTENT LIMITS FOR ARCHITECTURAL COATINGS [2,3] (Grams of VOC per Liter of Coating, Less Water and Less Exempt Compounds)	
COATING CATEGORY	**VOC LIMIT**
Flat coatings	50
Nonflat coatings	100
Nonflat-high gloss coatings	150
SPECIALTY COATINGS	
Aluminum roof coatings	400
Basement specialty coatings	400
Bituminous roof coatings	50
Bituminous roof primers	350
Bond breakers	350
Concrete curing compounds	350
Concrete/masonry sealers	100
Driveway sealers	50
Dry fog coatings	150
Faux finishing coatings	350
Fire resistive coatings	350
Floor coatings	100
Form-release compounds	250
Graphic arts coatings (sign paints)	500
High temperature coatings	420
Industrial maintenance coatings	250
Low solids coatings[1]	120
Magnesite cement coatings	450
Mastic texture coatings	100
Metallic pigmented coatings	500
Multicolor coatings	250
Pretreatment wash primers	420
Primers, sealers, and undercoaters	100
Reactive penetrating sealers	350
Recycled coatings	250
Roof coatings	50
Rust preventative coatings	250
Shellacs	
Clear	730
Opaque	550
Specialty primers, sealers and undercoaters	100
Stains	250
Stone consolidants	450
Swimming pool coatings	340
Traffic marking coatings	100
Tub and tile refinish coatings	420
Waterproofing membranes	250
Wood coatings	275
Wood preservatives	350
Zinc-rich primers	340

1. Grams of VOC per liter of coating, including water and including exempt compounds.
2. The specified limits remain in effect unless revised limits are listed in subsequent columns in the table.
3. Values in this table are derived from those specified by the California Air Resources Board, Architectural Coatings Suggested Control Measure, February 1, 2008. More information is available from the Air Resources Board.

14. Particleboard, medium density fiberboard (MDF) and hardwood plywood used in interior or exterior of the building shall comply with low formaldehyde emission standards as set forth in Table 4.504.5 below (4.504.5):

FORMALDEHYDE LIMITS[1] (Maximum Formaldehyde Emissions in Parts per Million)	
PRODUCT	**LIMIT**
Hardwood plywood veneer core	0.05
Hardwood plywood composite core	0.05
Particleboard	0.09
Medium density fiberboard	0.11
Thin medium density fiberboard[2]	0.13

1. Values in this table are derived from those specified by the California Air Resources Board, Air Toxics Control Measure for Composite Wood as tested in accordance with ASTM E 1333-96(2002). For additional information, see *California Code of Regulations*, Title 17, Sections 93120 through 93120.12
2. Thin medium density fiberboard has a maximum thickness of 5/16 inch (8 mm).

15. All duct and other related air distribution component openings shall be covered with tape, plastic, sheet metal or other methods acceptable to the building inspector to reduce the amount of water, dust and debris, which may enter the system until final startup of the HVAC equipment. (4.504.1)
16. Bathroom exhaust fans shall be ENERGY STAR compliant and be ducted to terminate outside the building. Unless functioning as a component of whole house ventilation system, fans must be controlled by a humidity control capable of adjustment between a relative humidity range of less than or equal to 50% to maximum 80%. (4.506.1)
17. Duct systems are sized, designed and equipment is selected using the following methods (4.507.2):
    a. Establish heat loss and heat gain values according to ANSI/ACCA 2 Manual J-2016 (Residential Load Calculation), ASHRAE handbooks or equivalent design software or methods.
    b. Size duct systems according to ANSI/ACCA 1 Manual D-2016 (Residential Duct Systems), ASHRAE handbooks or other equivalent design software or methods.
    c. Select heating and cooling equipment according to ANSI/ACCA 3 Manual S-2014 (Residential Equipment Selection) or other equivalent design software or methods.

Installer and Special Inspector Qualifications

18. HVAC system installers shall be trained and certified or work under direct supervision of trained and certified installers in the proper installation of HVAC systems. (702.1)
19. HVAC special inspectors must be qualified and able to demonstrate competence in the discipline they are inspecting. (702.2)

Documentations

20. An operation and maintenance manual, CD, web-based reference or other approved media shall be provided by the builder to the building occupant or owner at the final inspection. It shall include operation and maintenance instruction of the equipment and appliances. (4.410.1)
21. Documentation shall be provided to verify that finish materials used comply with VOC limits as set forth in Tables 4.504.1, 4.504.2, & 4.504.3. (4.504.2.4)
22. Documentation shall be provided to verify that composite wood products used comply with formaldehyde limits as set forth in Tables 4.504.5. (4.504.5.1)
23. Documentation which shows compliance with CAL Green code including construction documents, plans, specifications, builder or installer certification, and inspection reports and verification shall be available at the final inspection. (703.1)
24. CAL Green Documentation Compliance Certification form (City form) is required to be submitted to the Building Inspector prior to final building inspection. (703.1)

Community Development Department
Discretionary Application Owner's Affidavit

CITY OF NEWPORT BEACH
100 Civic Center Drive
Newport Beach, California 92660
949 644-3200
newportbeachca.gov/communitydevelopment

1. **Check Permits Requested:**

☐ Approval-in-Concept - **AIC #**
☐ Coastal Development Permit
  ☐ Waiver for De Minimis Development
☐ Coastal Residential Development
☑ Condominium Conversion
☐ Comprehensive Sign Program
☐ Development Agreement
☐ Development Plan
☐ Lot Line Adjustment
☐ Lot Merger
☐ Limited Term Permit -
  ☐ Seasonal ☐ < 90 day ☐ >90 days
☐ Modification Permit
☐ Off-Site Parking Agreement
☐ Planned Community Development Plan
☐ Planned Development Permit
☐ Site Development Review –
  ☐ Major ☐ Minor
☐ Parcel Map
☐ Staff Approval
☐ Tract Map
☐ Traffic Study
☐ Use Permit - ☐Minor ☐Conditional
  ☐ Amendment to existing Use Permit
☐ Variance
☐ Amendment - ☐Code ☐PC ☐GP ☐LCP
☐ Zoning Clearance - ☐ADU ☐ Use
☐ Residential Project Using Senate Bill 6
☐ Other:

2. **Project Address(es)/Assessor's Parcel No(s)**

407 Heliotrope Avenue; Corona Del Mar 92625

3. **Project Description and Justification (Attach additional sheets if necessary):**

Demolition of existing duplex residence.
Project to consists of a new duplex residence with:
Unit 'A' shall be 2,741 s.f. livable with 249 s.f. attached, 1 car garage and have 3 bedrooms, 3-1/2 baths
Unit 'B' shall be 1,737 s.f. livable with 230 s.f. attached, 1 car garage and have 3 bedrooms, 3-1/2 baths

4. **Property Owner's Affidavit***: (I) (We) Chris Hyun depose and say that (I am) (we are) the owner(s) of the property (ies) involved in this application. (I) (We) further certify, under penalty of perjury, that the foregoing statements and answers herein contained and the information herewith submitted are in all respects true and correct to the best of (my) (our) knowledge and belief.

Signature(s): _____ Title: Owner Date: 10/16/2023 (MM/DD/YEAR)

Signature(s): _____ Title: _____ Date: _____

*May be signed by the lessee or by an authorized agent if written authorization from the owner of the record is filed concurrently with the application. Please note, the owner(s)' signature for Parcel/Tract Map and Lot Line Adjustment Application must be notarized.

Under the Levine Act, Section 84308 of the Government Code, a party to a proceeding before the City involving a license, permit, or other entitlement for use is required to disclose on the record of the proceeding any contribution in an amount of more than two hundred fifty dollars ($250) made within the preceding 12 months by the party or the party's agent to any elected or appointed officer of the City. If you have made a qualifying contribution, please ensure to make this disclosure on the record. Please review Senate Bill 1439 - Statues 2022 for further information.

Please be further advised, application representatives who are not exempt and are considered a "lobbyist" pursuant to the City's Ordinance No. 2020-3 must file a lobbyist registration form. Click here or contact the City Clerk's Office at 949-644-3005 for more information.

1

a0.10

cal green residential mandatory measures

heliotrope duplex

407 heliotrope avenue
corona del mar, california
92625

1 CITY CORRECTIONS 16 OCTOBER 2023

LICENSED ARCHITECT
ERIC D. AUST
C-29374
31 MAY 2025
RENEWAL DATE
STATE OF CALIFORNIA

22 may 2023

© copyright 2023

job #2117

eric aust
architect
62 balboa coves
newport beach, california 92663
tel 949.637.5220

client:
JRC real estate development
14930 alondra blvd.
la mirada, california 90638
tel 562.623.9328

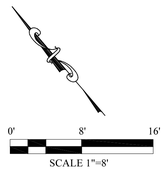

NOTE: RECORD EASEMENTS ARE NOT PLOTTED IF ANY.

SURVEYOR OR ENGINEER SHALL PERMANENTLY MONUMENT PROPERTY CORNERS OR OFFSETS BEFORE STARTING GRADING.

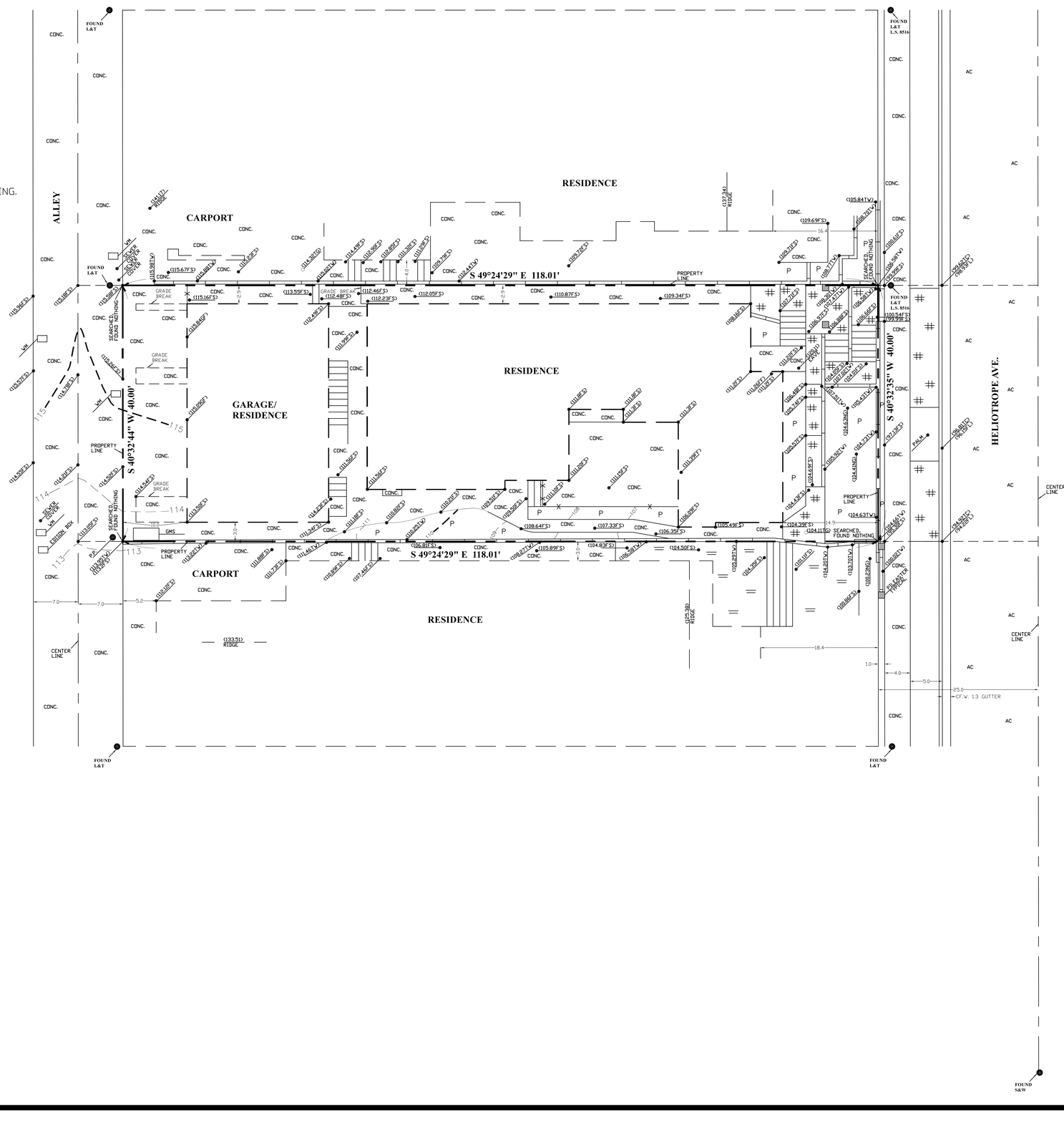

LEGEND

	DESCRIPTION
(123.45)	MEAS. ELEVATIONS
( )	REC. BRG. & DIST.
#	BRICK
=	DECK
	WALL
	BUILDING
	PROPERTY LINE
X X	FENCE
	BENCH MARK
A.C.	ASPHALT
C.F.	CURB FACE
CONC.	CONCRETE
C.P.	CONTROL POINT
E.P.	EDGE OF PAVEMENT
F.F.	FINISH FLOOR
FL.	FLOWLINE
F.S.	FINISHED SURFACE
G.F.	GARAGE FLOOR
G.M.	GAS METER
L&T	LEAD & TAG
M.H.	MAN-HOLE
N.G.	NATURAL GRADE
P	PLANTER
P.P.	POWER POLE
TC	TOP OF CURB
T.G.	TOP-GRATE
T.O.R.	TOP OF ROOF
S&W	SPIKE & WASHER
WM	WATER METER

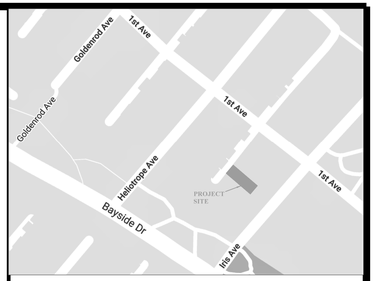

VICINITY MAP
NOT TO SCALE

ADDRESS OF PROJECT

407 HELIOTROPE
CORONA DEL MAR, CA

PREPARED FOR

ERIC AUST

LEGAL DESCRIPTION

A PORTION OF LOT 7 AND A PORTION OF LOT 9, BLOCK 334, CORONAL DEL MAR

APN 459-172-14

BENCH MARK

BENCH MARK #M-782
DATUM: NAVD88
ELEVATION: 94.032

TOPOGRAPHIC SURVEY

JOB: 85-37 DATE: 12/27/21

RdM SURVEYING INC.

RON MIEDEMA L.S. 4653
23016 LAKE FOREST DRIVE #409
LAGUNA HILLS, CA 92653
(949) 858-2924 OFFICE
(949) 422-1869 CELL
RDMSURVEYING@COX.NET

LICENSED LAND SURVEYOR
RON MIEDEMA
No. 4653
EXP. 9/30/25
STATE OF CALIFORNIA

PRECISE GRADING PLAN

FOR

HELIOTROPE DUPLEX

POR. LOTS 7 & 9, BLOCK 334, CORONA DEL MAR
407 HELIOTROPE AVENUE, CORONA DEL MAR, CALIFORNIA

811 Know what's below. Call before you dig.

DIAL TOLL FREE 811 AT LEAST TWO DAYS BEFORE YOU DIG

UNDERGROUND SERVICE ALERT OF SOUTHERN CALIFORNIA

DATE REVISED: 7-1-06

SHEET INDEX	
C-1	TITLE SHEET
C-2	PRECISE GRADING & DRAINAGE PLAN
C-3	EROSION CONTROL PLAN
C-4	SECTIONS & DETAILS
C-5	SOILS REPORT RECOMMENDATIONS

NOTICE TO CONTRACTOR

1. CONSTRUCTION CONTRACTOR AGREES THAT IN ACCORDANCE WITH GENERALLY ACCEPTED CONSTRUCTION PRACTICES, CONSTRUCTION CONTRACTOR WILL BE REQUIRED TO ASSUME SOLE AND COMPLETE RESPONSIBILITY FOR JOB SITE CONDITIONS DURING THE COURSE OF CONSTRUCTION OF THE PROJECT, INCLUDING SAFETY OF ALL PERSONS AND PROPERTY; THAT THIS REQUIREMENT SHALL BE MADE TO APPLY CONTINUOUSLY AND NOT BE LIMITED TO NORMAL WORKING HOURS, AND CONSTRUCTION CONTRACTOR FURTHER AGREES TO DEFEND, INDEMNIFY AND HOLD DESIGN PROFESSIONAL HARMLESS FROM ANY AND ALL LIABILITY, REAL OR ALLEGED, IN CONNECTION WITH THE PERFORMANCE OF WORK ON THIS PROJECT, EXCEPTING LIABILITY ARISING FROM THE SOLE NEGLIGENCE OF DESIGN PROFESSIONAL.
2. IF THIS PROJECT IS STAKED BY SURVEY CREWS OTHER THAN THOSE CREWS UNDER THE DIRECT SUPERVISION OF THE SIGNATORY ENGINEER, THE SIGNATORY ENGINEER WILL NO LONGER BE THE ENGINEER OF RECORD AND WILL HAVE NO RESPONSIBILITY AS TO THE FINAL CONSTRUCTED PROJECT. THE SIGNATORY ENGINEER WILL NOT BE RESPONSIBLE FOR ERRORS OR OMISSIONS THAT COULD HAVE BEEN CORRECTED DURING THE CONSTRUCTION OF THIS PROJECT, IF THE STAKING HAD BEEN DONE BY SURVEY CREWS UNDER HIS DIRECT SUPERVISION.

GRADING NOTES

1. GRADED SLOPES SHALL BE NO STEEPER THAN 2 HORIZONTAL TO 1 VERTICAL.
2. FILL SLOPES SHALL BE COMPACTED TO NO LESS THAN 90 PERCENT RELATIVE COMPACTION OUT TO THE FINISHED SURFACE.
3. ALL FILLS SHALL BE COMPACTED THROUGHOUT TO A MINIMUM OF 90 PERCENT RELATIVE COMPACTION AS DETERMINED BY ASTM TEST METHOD 1557, AND APPROVED BY THE SOILS ENGINEER. COMPACTION TESTS SHALL BE PERFORMED APPROXIMATELY EVERY TWO FEET IN VERTICAL HEIGHT AND OF SUFFICIENT QUANTITY TO ATTEST TO THE OVERALL COMPACTION EFFORT APPLIED TO THE FILL AREAS.
4. AREAS TO RECEIVE FILL SHALL BE CLEARED OF ALL VEGETATION AND DEBRIS, SCARIFIED AND APPROVED BY THE SOILS ENGINEER PRIOR TO PLACING OF THE FILL.
5. FILLS SHALL BE KEYED OR BENCHED INTO COMPETENT MATERIAL.
6. ALL EXISTING FILLS SHALL BE APPROVED BY THE SOILS ENGINEER OR REMOVED BEFORE ANY ADDITIONAL FILLS ARE ADDED.
7. ANY EXISTING IRRIGATION LINES AND CISTERNS SHALL BE REMOVED OR CRUSHED IN PLACE AND BACKFILLED AND APPROVED BY THE SOILS ENGINEER.
8. THE ENGINEERING GEOLOGIST AND SOILS ENGINEER SHALL, AFTER CLEARING AND PRIOR TO THE PLACEMENT OF FILL IN CANYONS, INSPECT EACH CANYON FOR AREAS OF ADVERSE STABILITY AND DETERMINE THE PRESENCE OF, OR POSSIBILITY OF FUTURE ACCUMULATION OF, SUBSURFACE WATER OR SPRING FLOW. IF NEEDED, DRAINS WILL BE DESIGNED AND CONSTRUCTED PRIOR TO THE PLACEMENT OF FILL IN EACH RESPECTIVE CANYON.
9. THE EXACT LOCATION OF THE SUBDRAINS SHALL BE SURVEYED IN THE FIELD FOR LINE AND GRADE.
10. ALL TRENCH BACKFILLS SHALL BE COMPACTED THROUGHOUT TO A MINIMUM OF 90 PERCENT RELATIVE COMPACTION, AND APPROVED BY THE SOILS ENGINEER. THE BUILDING DEPARTMENT MAY REQUIRE CORING OF CONCRETE FLAT WORK PLACED OVER UNTESTED BACKFILLS TO FACILITATE TESTING.
11. THE STOCKPILING OF EXCESS MATERIAL SHALL BE APPROVED BY THE CITY GRADING ENGINEER.
12. LANDSCAPING OF ALL SLOPES AND PADS SHALL BE IN ACCORDANCE WITH CHAPTER 15 OF THE NBMC.
13. ALL CUT SLOPES SHALL BE INVESTIGATED BOTH DURING AND AFTER GRADING BY AN ENGINEERING GEOLOGIST TO DETERMINE IF ANY STABILITY PROBLEM EXISTS. SHOULD EXCAVATION DISCLOSE ANY GEOLOGICAL HAZARDS OR POTENTIAL GEOLOGICAL HAZARDS, THE ENGINEERING GEOLOGIST SHALL RECOMMEND AND SUBMIT NECESSARY TREATMENT TO THE CITY GRADING ENGINEER FOR APPROVAL.
14. WHERE SUPPORT OR BUTTRESSING OF CUT AND NATURAL SLOPES IS DETERMINED TO BE NECESSARY BY THE ENGINEERING GEOLOGIST AND SOILS ENGINEER, THE SOILS ENGINEER WILL OBTAIN APPORVAL OF DESIGN, LOCATION AND CALCULATIONS FROM THE CITY GRADING ENGINEER PRIOR TO CONSTRUCTION.
15. THE ENGINEERING GEOLOGIST AND SOILS ENGINEER SHALL INSPECT AND TEST THE CONSTRUCTION OF ALL BUTTRESS FILLS AND ATTEST TO THE STABILITY OF THE SLOPE AND ADJACENT STRUCTURES UPON COMPLETION.
16. WHEN CUT PADS ARE BROUGHT TO NEAR GRADE THE ENGINEERING GEOLOGIST SHALL DETERMINE IF THE BEDROCK IS EXTENSIVELY FRACTURED OR FAULTED AND WILL READILY TRANSMIT WATER. IF CONSIDERED NECESSARY BY THE ENGINEERING GEOLOGIST AND SOILS ENGINEER, A COMPACTED FILL BLANKET WILL BE PLACED.
17. THE ENGINEERING GEOLOGIST SHALL PERFORM PERIODIC INSPECTIONS DURING GRADING.
18. NOTIFICATION OF NONCOMPLIANCE: IF, IN THE COURSE OF FULFILLING THEIR RESPONSIBILITY, THE CIVIL ENGINEER, THE SOILS ENGINEER, THE ENGINEERING GEOLOGIST OR THE TESTING AGENCY FINDS THAT THE WORK IS NOT BEING DONE IN CONFORMANCE WITH APPROVED GRADING PLANS, THE DISCREPANCIES SHALL BE REPORTED IMMEDIATELY IN WRITING TO THE PERSON IN CHARGE OF THE GRADING WORK AND TO THE CITY GRADING ENGINEER, RECOMMENDATIONS FOR CORRECTIVE MEASURES, IF NECESSARY, SHALL BE SUBMITTED TO THE CITY GRADING ENGINEER FOR APPROVAL.

REQUIRED INSPECTIONS

1. A PRE-GRADING MEETING SHALL BE SCHEDULED 48 HOURS PRIOR TO START OF GRADING WITH THE FOLLOWING PEOPLE PRESENT: OWNER, GRADING CONTRACTOR, DESIGN CIVIL ENGINEER, GEOLOGIST, CITY GRADING ENGINEER OR THEIR REPRESENTATIVES. REQUIRED FIELD INSPECTION WILL BE OUTLINED AT THE MEETING.
2. A PRE-PAVING MEETING SHALL BE SCHEDULED 48 HOURS PRIOR TO START OF THE SUB-GRADE PREPARATION FOR THE PAVING WITH THE FOLLOWING PEOPLE PRESENT: OWNER, PAVING CONTRACTOR, DESIGN CIVIL ENGINEER, SOILS ENGINEER, CITY GRADING ENGINEER OR THEIR REPRESENTATIVES. REQUIRED FIELD INSPECTIONS WILL BE OUTLINED AT THE MEETING.
3. CONTINUOUS SPECIAL INSPECTION, PER SECTION 1705.6, SHALL BE PERFORMED BY THE GEOTECHNICAL ENGINEER DURING SHORING AND EXCAVATION OPERATIONS AND DURING REMOVAL OF SHORING.

GENERAL GRADING NOTES

1. ALL WORK SHALL CONFORM TO CHAPTER 15 OF THE NEWPORT BEACH MUNICIPAL CODE (NBMC), THE PROJECT SOILS REPORT AND SPECIAL REQUIREMENTS OF THE PERMIT.
2. DUST SHALL BE CONTROLLED BY WATERING AND/OR DUST PALLIATIVE.
3. SANITARY FACILITIES SHALL BE MAINTAINED ON THE SITE DURING THE CONSTRUCTION PERIOD.
4. WORK HOURS ARE LIMITED FROM 7:00 AM TO 6:30 PM MONDAY THROUGH FRIDAY; 8:00 AM TO 6:00 PM SATURDAYS; AND NO WORK SUNDAYS AND HOLIDAYS PER SECTION 10-28 OF THE NBMC.
5. NOISE, EXCAVATION, DELIVERY AND REMOVAL SHALL BE CONTROLLED PER SECTION 10-28 OF THE NBMC.
6. THE STAMPED SET OF APPROVED PLANS SHALL BE ON THE JOB SITE AT ALL TIMES.
7. PERMITTEE AND CONTRACTOR ARE RESPONSIBLE FOR LOCATING AND PROTECTING UTILITIES.
8. APPROVED DRAINAGE PROVISIONS AND PROTECTIVE MEASURES MUST BE USED TO PROTECT ADJOINING PROPERTIES DURING THE GRADING OPERATION.
9. CESSPOOLS AND SEPTIC TANKS SHALL BE ABANDONED IN COMPLIANCE WITH THE UNIFORM PLUMBING CODE AND APPROVED BY THE BUILDING OFFICIAL.
10. HAUL ROUTES FOR IMPORT OR EXPORT OF MATERIALS SHALL BE APPROVED BY THE CITY TRAFFIC ENGINEER AND PROCEDURES SHALL CONFORM WITH CHAPTER 15 OF THE NBMC.
11. POSITIVE DRAINAGE SHALL BE MAINTAINED AWAY FROM ALL BUILDING AND SLOPE AREAS.
12. FAILURE TO REQUEST INSPECTIONS AND/OR HAVE REMOVABLE EROSION CONTROL DEVICES ON-SITE AT THE APPROPRIATE TIMES SHALL RESULT IN FORFEITURE OF THE CONSTRUCTION SITE CLEANUP DEPOSIT.
13. ALL PLASTIC DRAINAGE PIPE SHALL CONSIST OF PVC OR ABS PLASTIC AND EITHER ASTM 2751, ASTM D1527, ASTM D3034OR ASTM D1785.
14. NO PAINT, PLASTER, CEMENT, SOIL, MORTER OR OTHER RESIDUE SHALL BE ALLOWED TO ENTER STREETS, CURBS, GUTTERS, OR STORM DRAINS. ALL WASTE MATERIALS SHALL BE REMOVED FROM THE SITE. NBMC 17.32.020
15. CONTRACTOR SHALL USE THE CITY STANDARD FORM '30-DAY NOTICE OF INTENT TO EXCAVATE' TO NOTIFY ADJACENT PROPERTY OWNERS BY CERTIFIED MAIL 30 DAYS PRIOR TO STARTING EXCAVATION OR SHORING. CITY STANDARD FORM CAN BE OBTAINED AT: HTTP://WWW.NEWPORTBEACHCA.GOV/HOME/SHOWDOCUMENT?ID=17395. PROOF OF CERTIFIED DELIVERY IS REQUIRED AT THE TIME OF PERMIT ISSUANCE.
16. CAL-OSHA PERMIT IS REQUIRED FOR EXCAVATIONS DEEPER THAN 5' AND FOR SHORING AND/OR UNDERPINNING.

EROSION CONTROL NOTES

1. TEMPORARY EROSION CONTROL PLANS ARE REQUIRED FROM OCTOBER 15 TO MAY 15.
2. EROSION CONTROL DEVICES SHALL BE AVAILABLE ON SITE BETWEEN OCTOBER 15 AND MAY 15.
3. BETWEEN OCTOBER 15 AND MAY 15, EROSION CONTROL MEASURES SHALL BE IN PLACE AT THE END OF EACH WORKING DAY WHENEVER THE FIVE-DAY PROBABILITY OF RAIN EXCEEDS 30 PERCENT. DURING THE REMAINDER OF THE YEAR, THAY SHALL BE IN PLACE AT THE END OF THE WORKING DAY WHENEVER THE DAILY RAINFALL PROBABILITY EXCEEDS 50 PERCENT.
4. LANDSCAPING PLANS SHALL BE SUBMITTED FOR APPROVAL, WORK COMPLETED AND A CERTIFICATE OF CONFORMANCE RECEIVED BY THE CITY ENGINEER PRIOR TO CLOSURE OF PERMIT, UNLESS WAIVED BY THE CITY GRADING ENGINEER.
5. TEMPORARY DESILTING BASINS, WHEN REQUIRED, SHALL BE INSTALLED AND MAINTAINED FOR THE DURATION OF THE PROJECT.

EXISTING UTILITIES NOTE

ALL UNDERGROUND UTILITIES OR STRUCTURES REPORTED BY THE OWNER OR OTHERS AND THOSE SHOWN ON THE RECORDS EXAMINED ARE INDICATED WITH THEIR APPROXIMATE LOCATION AND EXTENT.

THE OWNER BY ACCEPTING THESE PLANS OR PROCEEDINGS WITH IMPROVEMENTS PURSUANT THERETO AGREES TO ASSUME LIABILITY AND TO HOLD UNDERSIGNED HARMLESS FOR ANY DAMAGES RESULTING FROM THE EXISTENCE OF UNDERGROUND UTILITIES OR STRUCTURES NOT REPORTED TO THE UNDERSIGNED; NOT INDICATED ON THE PUBLIC RECORDS EXAMINED; LOCATED AT VARIANCE WITH THAT REPORTED OR SHOWN ON RECORDS EXAMINED.

THE CONTRACTOR IS REQUIRED TO TAKE DUE PRECAUTIONARY MEASURES TO PROTECT THE UTILITIES OR STRUCTURES SHOWN AND ANY OTHER UTILITIES OR STRUCTURES FOUND AT THE SITE. IT SHALL BE THE CONTRACTOR'S RESPONSIBILITY TO NOTIFY THE OWNERS OF THE UTILITIES OR STRUCTURES CONCERNED BEFORE STARTING WORK.

DOCUMENTATION

1. AN AS-BUILT GRADING PLAN SHALL BE PREPARED BY THE CIVIL ENGINEER INCLUDING ORIGINAL GROUND SURFACE ELEVATIONS, AS-GRADED ELEVATIONS, LOT DRAINAGE PATTERNS AND LOCATIONS, AND ELEVATIONS OF ALL SURFACE AND SUB-SURFACE DRAINAGE FACILITIES. HE SHALL PROVIDE WRITTEN APPROVAL THAT THE WORK WAS DONE IN ACCORDANCE WITH THE FINAL APPROVED GRADING PLAN AND STATE THE NUMBER OF YARDS OF CUT AND/OR FILL MOVED DURING THE OPERATION.
2. A SOILS GRADING REPORT PREPARED BY THE SOILS ENGINEER, INCLUDING LOCATIONS AND ELEVATION OF FIELD DENSITY TESTS, SUMMARIES OF FIELD AND LABORATORY RESULTS AND OTHER SUBSTANTIATED DATA AND COMMENTS ON ANY CHANGES MADE DURING GRADING AND THEIR EFFECT ON THE RECOMMENDATIONS MADE IN THE SOILS ENGINEERING INVESTIGATION REPORT. HE SHALL PROVIDE WRITTEN APPROVAL AS TO THE ADEQUACY OF THE SITE FOR THE INTENDED USE AND COMPLETION OF WORK IN ACCORDANCE WITH THE NBMC.
3. A GEOLOGIC GRADING REPORT PREPARED BY THE ENGINEERING GEOLOGIST, INCLUDING A FINAL DESCRIPTION OF THE GEOLOGY OF THE SITE, INCLUDING ANY NEW INFORMATION DISCLOSED DURING THE GRADING AND THE EFFECT OF SAME ON RECOMMENDATIONS INCORPORATED IN THE APPROVED GRADING PLAN. HE SHALL PROVIDE WRITTEN APPROVAL AS TO THE ADEQUACY OF THE SITE FOR THE INTENDED USE AS AFFECTED BY GEOLOGIC FACTORS.

CITY OF NEWPORT BEACH NOTES

1. AN APPROVED ENCROACHMENT PERMIT IS REQUIRED FOR ALL WORK ACTIVITIES WITHIN THE PUBLIC RIGHT-OF-WAY
2. AN ENCROACHMENT AGREEMENT IS REQUIRED FOR ALL NON-STANDARD PRIVATE IMPROVEMENTS WITHIN THE PUBLIC RIGHT-OF-WAY. ALL NON-STANDARD IMPROVEMENTS SHALL COMPLY WITH CITY COUNCIL POLICY L-6
3. A PUBLIC WORKS DEPARTMENT ENCROACHMENT PERMIT INSPECTION IS REQUIRED BEFORE THE BUILDING DEPARTMENT PERMIT FINAL CAN BE ISSUED. AT THE TIME OF PUBLIC WORKS DEPARTMENT INSPECTION, IF ANY OF THE EXISTING PUBLIC IMPROVEMENTS SURROUNDING THE SITE IS DAMAGED BY THE PRIVATE WORK, NEW CONCRETE SIDEWALK, CURB AND GUTTER, AND ALLEY/STREET PAVEMENT WILL BE REQUIRED. ADDITIONALLY, IF EXISTING UTILITIES INFRASTRUCTURE ARE DEEMED SUBSTANDARD, A NEW 1-INCH WATER SERVICE, WATER METER BOX, SEWER LATERAL AND/OR CLEANOUT WITH BOX AND LID WILL BE REQUIRED. 100% OF THE COST SHALL BE BORNE BY THE PROPERTY OWNER (MUNICIPAL CODES 14.24.020 AND 14.08.030). SAID DETERMINATION AND THE EXTENT OF THE REPAIR WORK SHALL BE MADE AT THE DISCRETION OF THE PUBLIC WORKS INSPECTOR. CONTRACTOR IS RESPONSIBLE TO MAINTAIN THE PUBLIC RIGHT-OF-WAY AT ALL TIMES DURING THE CONSTRUCTION PROJECT. A STOP WORK NOTICE MAY BE ISSUED FOR ANY DAMAGE OR UNMAINTAINED PORTION OF THE PUBLIC RIGHT-OF-WAY.
4. ALL WORK RELATED TO WATER IN THE PUBLIC RIGHT-OF-WAY SHALL BE PERFORMED BY A C-34 LICENSED PIPELINE CONTRACTOR OR AN 'A' LICENSED GENERAL ENGINEERING CONTRACTOR.
5. ALL WORK RELATED TO WASTEWATER IN THE PUBLIC RIGHT-OF-WAY SHALL BE PERFORMED BY A C-42 LICENSED SANITATION SEWER CONTRACTOR OR AN 'A' LICENSED GENERAL ENGINEERING CONTRACTOR.
6. ISSUANCE OF A BUILDING PERMIT BY THE CITY OF NEWPORT BEACH DOES NOT RELIEVE APPLICANTS OF THE LEGAL REQUIREMENTS TO OBSERVE COVENANTS, CONDITIONS, AND RESTRICTIONS WHICH MAY BE RECORDED AGAINST THE PROPERTY OR TO OBTAIN PLANS. YOU SHOULD CONTACT YOUR COMMUNITY ASSOCIATIONS PRIOR TO COMMENCEMENT OF ANY CONSTRUCTION AUTHORIZED BY THIS PERMIT.

PROPERTY CORNER MONUMENTATION

SURVEYOR OR ENGINEER SHALL MONUMENT PROPERTY CORNERS, BEFORE STARTING GRADING, WITH PERMANENT MONUMENTS.

REVIEW IS SUBJECT TO THE LIMITATIONS STATED IN THE REPORT DATED 5-5-2022, FILE NO: 8677-10 REPORT NO: R1-8677 R MCCARTHY CONSULTING, INC.

REGISTERED PROFESSIONAL ENGINEER ROBERT J. MCCARTHY No. 2490 Exp. 3/31/25 GEOTECHNICAL STATE OF CALIFORNIA

Signed 1/03/2024

CONSTRUCTION NOTES AND QUANTITY ESTIMATE

EARTHWORK	CUT	FILL
EXCAVATION	405 CY	
EMBANKMENT		30 CY
OVEREXCAVATION/RECOMPACTION	360 CY	360 CY
EXPORT		375 CY
TOTAL	765 CY	765 CY

CONSTRUCTION NOTES

1. CONSTRUCT DRIVEWAY. SEE DETAIL ON SHEET C-4 & LANDSCAPE PLANS. ---------- 420 S.F.
2. CONSTRUCT HARDSCAPE. SEE DETAIL ON SHEET C-4 & LANDSCAPE PLANS. ---------- 1,560 S.F.
3. UTILITY TRENCHING AND ALLEY RESURFACING PER CITY OF N.B. STD. 106-A. ---------- 64 S.F.
4. INSTALL 4" PVC SCH 40 OR SDR 35 PIPE DRAIN SYSTEM. ---------- 170 L.F.
5. INSTALL 6" FLAT GRATE (NDS 918B OR EQUAL) W/ RISER & ADAPTOR. ---------- 17 EA.
6. INSTALL 6" ATRIUM GRATE (NDS 918B OR EQUAL) W/ RISER & ADAPTOR. ---------- 18 EA.
7. CONNECT DOWNSPOUT TO DRAINAGE SYSTEM. SEE DETAIL ON SHEET C-4. ---------- 9 EA.
8. CONSTRUCT PRIVATE DRAIN THROUGH CURB PER CITY OF N.B. STD. 184. ---------- 2 EA.
9. INSTALL SUBDRAIN PER GEOTECHNICAL REPORT RECOMMENDATIONS. ---------- 260 L.F.
10. INSTALL 12" DRAINBOX (JENSEN PRECAST MODEL 1212 OR EQUAL). ---------- 2 EA.
11. INSTALL 5" WIDE TRENCH DRAIN (NDS 864 OR EQUAL). ---------- 2 EA.
12. CUSTOM BIOFILTRATION PLANTER BMP. SEE DETAIL ON SHEET C-4. ---------- 92 S.F.
13. INSTALL 1" WATER SERVICE AND METER PER CITY OF N.B. STD. 502. ---------- 1 EA.
14. CONSTRUCT SEWER LATERAL W/ CLEANOUT PER CITY OF N.B. STD. 406. ---------- 1 EA.
15. INSTALL CLEANOUT ON EXISTING SEWER LATERAL PER CITY OF N.B. STD. 406. ---------- 1 EA.

NOTE: QUANTITIES SHOWN HEREON ARE ESTIMATED FOR PERMIT PURPOSES ONLY. CONTRACTOR SHALL PERFORM OWN QUANTITY TAKEOFFS FOR BIDDING AND OTHER PURPOSES.

VICINITY MAP
NOT TO SCALE

PROJECT INFORMATION

OWNER
JRC REAL ESTATE DEVELOPMENT
14930 ALONDRA BLVD.
LA MIRADA, CA 90638
TEL: (562) 623-9328

ARCHITECT
ERIC AUST ARCHITECT
62 BALBOA COVES
NEWPORT BEACH, CA 92663
TEL: (949) 637-5220
EMAIL: aust.architect@gmail.com

CIVIL ENGINEER
TOAL ENGINEERING, INC.
139 AVENIDA NAVARRO
SAN CLEMENTE, CA 92672
TEL: (949) 492-8586
CONTACT: ADAM TOAL, PE
WEB: www.toalengineering.com

ADDRESS
407 HELIOTROPE AVENUE
CORONA DEL MAR, CA 92625

SOILS ENGINEER
R MCCARTHY CONSULTING
23 CORPORATE PLAZA, SUITE 150
NEWPORT BEACH, CA. 92660
TEL: (949) 629-2539

LEGAL DESCRIPTION
A PORTION OF LOT 7 AND
A PORTION OF LOT 9, BLOCK 334,
CORONA DEL MAR

SOURCE OF TOPOGRAPHY
RdM SURVEYING INC.
(SEE TOPOGRAPHIC SURVEY)

ASSESSOR'S PARCEL NO.
459-172-14

BENCH MARK
BENCH MARK #M-782
DATUM: NAVD88
ELEVATION: 94.032

PLANS PREPARED BY:

TOAL ENGINEERING, INC.

CIVIL ENGINEERING
LAND SURVEYING
STORMWATER QUALITY

139 Avenida Navarro
San Clemente, CA 92672
949.492.8586
www.toalengineering.com

REGISTERED PROFESSIONAL ENGINEER ADAM L. TOAL No. 59275 CIVIL STATE OF CALIFORNIA

ADAM L. TOAL
R.C.E. 59275
DATE: 12/26/23

PREPARED FOR:

JRC REAL ESTATE DEVLOPMENT
14930 ALONDRA BLVD.
LA MIRADA, CA 90638
TEL: (562) 623-9328

NO.	REVISIONS	BY	DATE	APVD.	DATE

HELIOTROPE DUPLEX

TITLE SHEET

POR. LOTS 7 & 9, BLOCK 334, CORONA DEL MAR
407 HELIOTROPE AVENUE, CORONA DEL MAR, CALIFORNIA

DATE: 12/22/2023		H. SCALE: N/A	
SURVEY DATE: N/A		V. SCALE: N/A	
DRN.: B.J.F.		DWG. NO. C-1	
CHD.: M.F.B.			
APPD.: M.F.B.			
JOB NO. 23032	SHEET 1	OF 5	

12/22/2023 4:02:06 PM N:\23xx\23032 Lefbeck 407 Heliotrope\Drawings\Civil\23032-gp-01.dwg

LEGEND

100	EXISTING CONTOUR	FS	PROPOSED FINISHED SURFACE
100	PROPOSED CONTOUR	FG	PROPOSED FINISHED GROUND
100.00	SPOT ELEVATION	F.F.	PROPOSED FINISHED FLOOR
	PROPERTY LINE	F.Y.S.B.	SIDE YARD SETBACK
	PROPOSED HARDSCAPE	GB	GRADE BREAK
	SPA (BY OTHERS UNDER SEPARATE PLAN AND PERMIT)	H.P.	HIGH POINT
	PROPOSED GRAVEL (SEE LANDSCAPE PLAN)	INV	INVERT OF PIPE
4"===	PROPOSED STORM DRAIN	PA	PLANTER AREA
sub	PROP. SUBDRAIN	PAD	PROPOSED PAD ELEVATION
R	RIDGE	P.L.	PROPERTY LINE
	PROPOSED RISER	R.Y.S.B.	REAR YARD SETBACK
	EXISTING SITE WALL	S.Y.S.B.	SIDE YARD SETBACK
	PROPOSED SITE WALL	TF	TOP OF FOOTING
	PROPOSED RETAINING WALL	TG	TOP OF GRATE
	DOWNSPOUT	T/SLAB	PROPOSED TOP OF SLAB
		TW	TOP OF WALL

EASEMENT NOTES

THERE ARE NO PLOTTABLE EASEMENTS ON THE SUBJECT PROJECT PER FIRST AMERICAN TITLE COMPANY PRELIMINARY REPORT NO. 0625-6837857 DATED FEBRUARY 9, 2023.

UTILITY NOTES

SEWER AND WATER INFORMATION SHOWN HEREON PER CITY OF NEWPORT BEACH GIS MAP AND SOURCE DOCUMENTS REFERENCED THEREIN.

SCOPE OF WORK

DEMOLITION OF EXISTING DUPLEX RESIDENCE; PROJECT TO CONSIST OF A NEW DUPLEX RESIDENCE WITH UNIT 'A' BEING 2,648 S.F. LIVABLE WITH 287 S.F. DETACHED, 1 CAR GARAGE. UNIT 'B' SHALL BE 1,799 S.F. LIVABLE WITH 230 S.F. ATTACHED, 1 CAR GARAGE.

DEVELOPMENT STATISTICS

ITEM	ACRES	SQ. FT.	%
TOTAL SITE AREA	0.108	4,720	100
PROJECT AREA	0.108	4,720	100
IMPERVIOUS AREA			
PRE-PROJECT	0.068	4,265	90
NEW	0.106	4,425	94
POST-PROJECT	0.106	4,425	94

THE PROPOSED REDEVELOPMENT PROJECT ADDS/REPLACES 4,425 SQ. FT. OF IMPERVIOUS AREA, WHICH IS BELOW THE 5,000 SQ. FT. THRESHOLD FOR PRIORITY PROJECT DESIGNATION; THUS, THE PROPOSED REDEVELOPMENT IS NOT A PRIORITY PROJECT AND A WQMP IS NOT REQUIRED.

AS INFILTRATION IS NOT RECOMMENDED FOR THIS SITE (PER THE PROJECT GEOTECHNICAL REPORT), THE SELECTED BMP FOR THIS PROJECT IS BIORETENTION WITH UNDERDRAIN. SEE SIZING CALCULATION (WORKSHEET C) ON SHEET C-3.

ADDITIONAL NOTES

1. ALL ROOFS SHALL BE GUTTERED. ROOF DOWNSPOUTS SHALL CONNECT DIRECTLY TO THE SITE DRAINAGE SYSTEM, UNLESS NOTED OTHERWISE.
2. PAD ELEVATIONS ARE BASED ON 7" CONCRETE SLAB OVER 2" SAND OVER 15-MIL VAPOR BARRIER OVER 2" SAND OVER 4" GRAVEL PER PROJECT FOUNDATION PLAN PREPARED BY WRIGHT STRUCTURAL ENGINEERS DATED SEPTEMBER 21, 2023, AND SOILS REPORT PREPARED BY R McCARTHY CONSULTING, INC., DATED MAY 5, 2022 (REPORT NO. R1-8677). CONTRACTOR SHALL VERIFY THE ABOVE INFORMATION W/ THE SOILS ENGINEER AND STRUCTURAL ENGINEER PRIOR TO COMMENCEMENT OF GRADING.
3. SEE SOIL REPORT FOR ALL OVEREXCAVATION, FILL SOIL, AND RECOMPACTION REQUIREMENTS.
4. SEE SOILS REPORT FOR RECOMMENDATIONS REGARDING CONCRETE STRENGTH, CEMENT TYPE, AND WATER/CEMENT RATIO FOR SITE CONCRETE.
5. WHERE EXTERIOR/INTERIOR UTILITY TRENCHES ARE PROPOSED IN A DIRECTION THAT PARALLELS ANY BUILDING FOOTING, THE BOTTOM OF THESE TRENCHES SHALL NOT EXTEND BELOW A 1:1 PLANE PROJECTED DOWNWARD FROM THE BOTTOM EDGE OF FOOTING. WHERE THIS OCCURS, ADJACENT FOOTING SHALL BE DEEPENED OR UTILITY CONSTRUCTED & BACKFILLED PRIOR TO CONSTRUCTION. SEE GEOTECHNICAL REPORT FOR UTILITY LINE TRENCHING, INSTALLATION, AND BACKFILL RECOMMENDATIONS.
6. SITE WALLS ARE SHOWN HEREON FOR REFERENCE ONLY, AND ARE TO BE CONSTRUCTED PER SEPARATE PLANS AND PERMIT.
7. FOR FOOTING AND FOUNDATION DESIGN, SEE STRUCTURAL PLANS.
8. ALL RECOMMENDATIONS CONTAINED IN THE SOILS REPORT BY R McCARTHY CONSULTING, INC. DATED MAY 5, 2022 (REPORT NO.: R1-8677 / FILE NO.: 8677-00), AND ALL ADDENDA THERETO, ARE CONSIDERED PART OF THIS PLAN.
9. PROVIDE DRAINAGE FOR ALL PLANTER POTS AS SHOWN ON THE PROJECT LANDSCAPE PLAN, AND CONNECT TO THE SITE DRAINAGE SYSTEM SHOWN HEREON.
10. LANDSCAPING WITHIN THE PUBLIC RIGHT-OF-WAY SHALL NOT EXCEED 36 INCHES IN MAXIMUM GROWTH HEIGHT. SEE LANDSCAPE PLAN.
11. SEE PUBLIC WORKS NOTES ON SHEET C-1 FOR ALL WORK SHOWN HEREON IN THE PUBLIC RIGHT-OF-WAY.
12. ALL DRAINAGE PIPES SHALL SLOPE AT 1% MINIMUM. SEE PIPE SLOPES AND INVERT ELEVATIONS HEREON.

CONSTRUCTION NOTES

1. CONSTRUCT DRIVEWAY. SEE DETAIL ON SHEET C-4 & LANDSCAPE PLANS.
2. CONSTRUCT HARDSCAPE. SEE DETAIL ON SHEET C-4 & LANDSCAPE PLANS.
3. UTILITY TRENCHING AND ALLEY RESURFACING PER CITY OF N.B. STD. 106-A.
4. INSTALL 4" PVC SCH 40 OR SDR 35 PIPE DRAIN SYSTEM.
5. INSTALL 6" FLAT GRATE (NDS 918B OR EQUAL) W/ RISER & ADAPTOR.
6. INSTALL 6" ATRIUM GRATE (NDS 918B OR EQUAL) W/ RISER & ADAPTOR.
7. CONNECT DOWNSPOUT TO DRAINAGE SYSTEM. SEE DETAIL ON SHEET C-4.
8. CONSTRUCT PRIVATE DRAIN THROUGH CURB PER CITY OF N.B. STD. 184.
9. INSTALL SUBDRAIN PER GEOTECHNICAL REPORT RECOMMENDATIONS.
10. INSTALL 12" DRAINBOX (JENSEN PRECAST MODEL 1212 OR EQUAL).
11. INSTALL 5" WIDE TRENCH DRAIN (NDS 864 OR EQUAL).
12. CUSTOM BIOFILTRATION PLANTER BMP. SEE DETAIL ON SHEET C-4.
13. INSTALL 1" WATER SERVICE AND METER PER CITY OF N.B. STD. 502.
14. CONSTRUCT SEWER LATERAL W/ CLEANOUT PER CITY OF N.B. STD. 406.
15. INSTALL CLEANOUT ON EXISTING SEWER LATERAL PER CITY OF N.B. STD. 406.

DISPOSITION NOTES

1. APPROX. LOCATION OF EXIST. SEWER LATERAL TO REMAIN. CONTRACTOR TO VERIFY LOCATION, DEPTH, AND CONDITION PRIOR TO NEW CONNECTIONS.
2. EXISTING WATER SERVICE AND METER TO REMAIN; PROTECT IN PLACE.
3. EXISTING STREET TREE TO REMAIN; PROTECT IN PLACE.
4. REMOVE BRICK PAVERS IN R.O.W.; PLANT NEW TURF (SEE LANDSCAPE PLAN).

NOTICE TO CONTRACTOR

REQUIRED CERTIFICATIONS / APPROVALS

In addition to any certifications required by the agencies having jurisdiction over this project, the following approvals from the Civil engineer of record are required:

1. Foundation forms for improvements on or abutting property lines is required prior to concrete pour.
2. Location, size, and depth of all drain lines prior to backfill.
3. Stormwater Best Management Practices (BMPs) at each significant construction stage and at project completion to ensure that BMPs have been constructed and/or installed in accordance with the approved Grading Plan and Water Quality Management Plan.

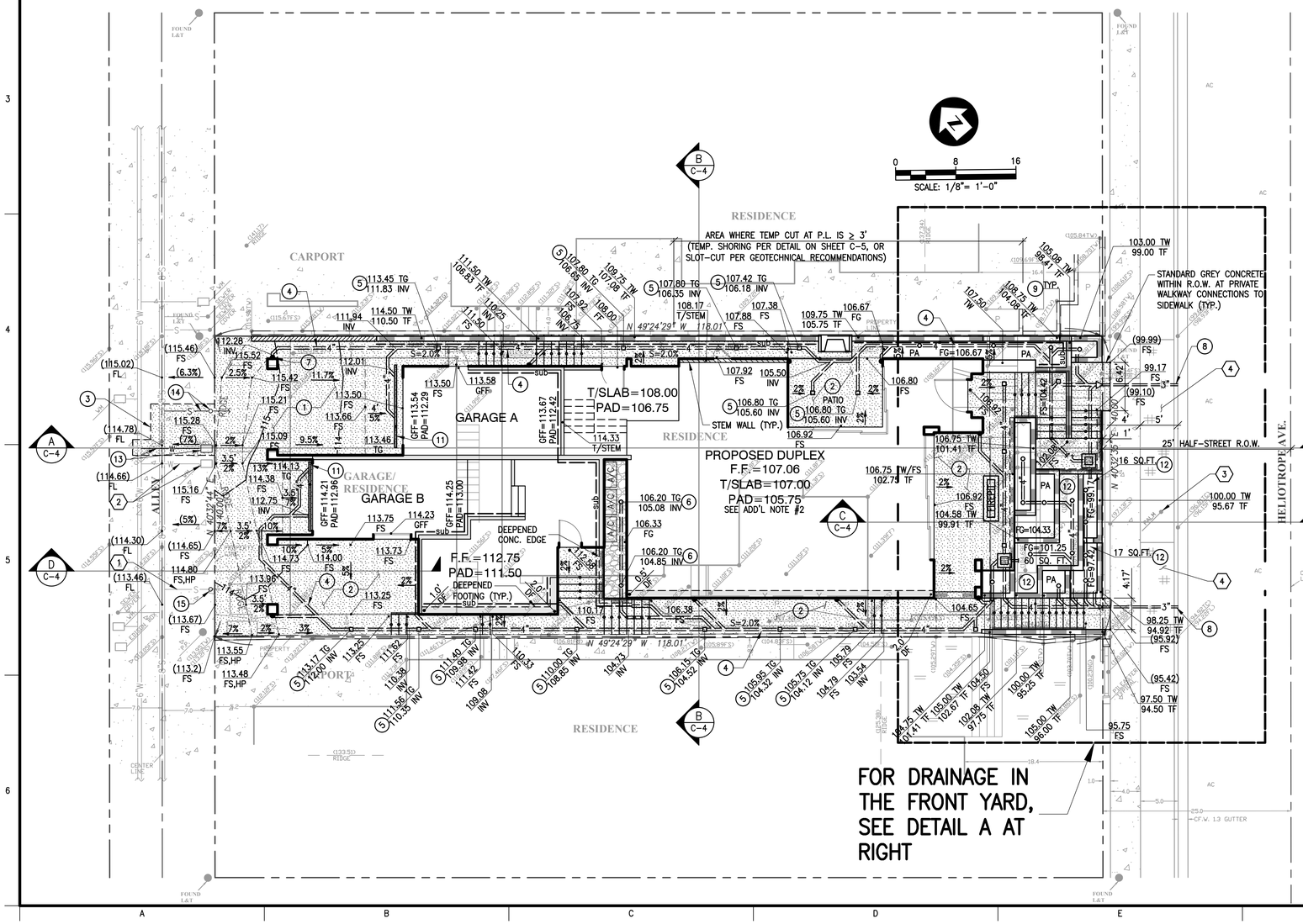

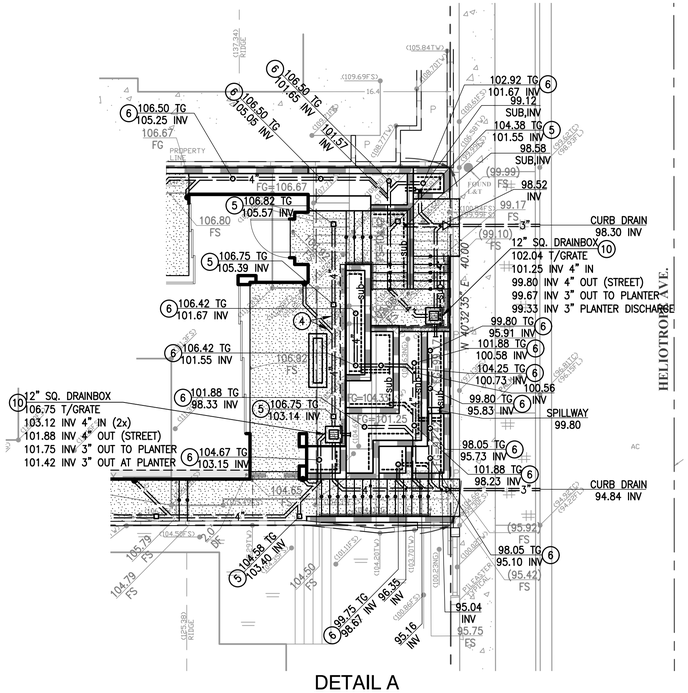

DETAIL A

REGISTERED PROFESSIONAL ENGINEER ROBERT J. McCARTHY No. 2490 Exp. 3/31/25 GEOTECHNICAL STATE OF CALIFORNIA
Signed 1/11/2024

REVIEW IS SUBJECT TO THE LIMITATIONS STATED IN THE REPORT DATED 5-5-2022, FILE NO: 8677-10 REPORT NO: R1-8677 R MCCARTHY CONSULTING, INC.

PLANS PREPARED BY:

TOAL ENGINEERING, INC.

CIVIL ENGINEERING
LAND SURVEYING
STORMWATER QUALITY

139 Avenida Navarro
San Clemente, CA 92672
949.492.8586
www.toalengineering.com

REGISTERED PROFESSIONAL ENGINEER ADAM L. TOAL No. 59275 CIVIL STATE OF CALIFORNIA

ADAM L. TOAL
R.C.E. 59275
DATE: 1/10/24

PREPARED FOR:

JRC REAL ESTATE DEVLOPMENT
14930 ALONDRA BLVD.
LA MIRADA, CA 90638
TEL: (562) 623-9328

REVISIONS	BY	DATE	APVD.	DATE

HELIOTROPE DUPLEX

PRECISE GRADING PLAN

POR. LOTS 7 & 9, BLOCK 334, CORONA DEL MAR
407 HELIOTROPE AVENUE, CORONA DEL MAR, CALIFORNIA

DATE: 12/22/2023	H. SCALE: 1/8" = 1'
SURVEY DATE: N/A	V. SCALE: N/A
DRN.: B.J.F.	DWG. NO. C-2
CHD.: M.F.B.	
APPD.: M.F.B.	
JOB NO. 23032	SHEET 2 OF 5

1/10/2024 12:40:53 PM N:\23Jobs\23032 Leftbank 407 Heliotrope\Drawings\Civil\23032-gp-02.dwg

YEAR-ROUND BMP REQUIREMENTS

1. WHERE APPROPRIATE, SEDIMENT CONTROL BMPs SHALL BE IMPLEMENTED AT THE SITE PERIMETER, AT ALL OPERATIONAL STORM DRAIN INLETS, AND AT ALL NON-ACTIVE SLOPES, TO PROVIDE SUFFICIENT PROTECTION FROM STORMS.
2. WIND EROSION BMPs (DUST CONTROL) SHALL BE IMPLEMENTED AND MAINTAINED.
3. BMPs TO CONTROL OFF-SITE SEDIMENT TRACKING SHALL BE IMPLEMENTED AND MAINTAINED.
4. APPROPRIATE WASTE MANAGEMENT AND MATERIALS POLLUTION CONTROL BMPs SHALL BE IMPLEMENTED TO PREVENT THE CONTAMINATION OF STORM WATER BY WASTES AND CONSTRUCTION MATERIALS.
5. APPROPRIATE NON-STORM WATER BMPs SHALL BE IMPLEMENTED TO PREVENT THE CONTAMINATION OF STORM WATER FROM CONSTRUCTION ACTIVITIES.
6. ADEQUATE PHYSICAL OR VEGETATION EROSION CONTROL BMPs (TEMPORARY OR PERMANENT) SHALL BE INSTALLED AND ESTABLISHED AS SOON AS PRACTICAL FOR ALL COMPLETED SLOPES OR SLOPES IN NON-ACTIVE AREAS. THESE BMPs MUST BE MAINTAINED THROUGHOUT THE YEAR. IF A SELECTED BMP FAILS, IT MUST BE REPAIRED AND IMPROVED, OR REPLACED WITH AN ACCEPTABLE ALTERNATE AS SOON AS IT IS SAFE TO DO SO. THE FAILURE OF A BMP MAY INDICATE THAT THE BMP, AS INSTALLED, WAS NOT ADEQUATE FOR THE CIRCUMSTANCES IN WHICH IT WAS USED. REPAIRS OR REPLACEMENTS MUST RESULT IN A MORE ROBUST BMP, OR ADDITIONAL BMPs SHOULD BE INSTALLED TO PROVIDE ADEQUATE PROTECTION.
7. A DISTURBED AREA THAT IS NOT COMPLETED, BY THAT IS NOT BEING ACTIVELY GRADED (NON-ACTIVE AREA), SHALL BE FULLY PROTECTED FROM EROSION WITH TEMPORARY OR PERMANENT BMPs (EROSION AND SEDIMENT CONTROL). THE ABILITY TO DEPLOY STANDBY BMP MATERIALS IS NOT SUFFICIENT FOR THESE AREAS. EROSION AND SEDIMENT CONTROL BMPs MUST ACTUALLY BE DEPLOYED. THIS INCLUDES ALL BUILDING PADS, UNFINISHED ROADS, AND SLOPES.
8. SUFFICIENT MATERIALS NEEDED TO INSTALL STANDBY EROSION AND SEDIMENT CONTROL BMPs NECESSARY TO COMPLETELY PROTECT THE EXPOSED PORTIONS OF THE SITE FROM EROSION AND TO PREVENT SEDIMENT DISCHARGES SHALL BE STORED ON-SITE. AREAS THAT HAVE ALREADY BEEN PROTECTED FROM EROSION USING PERMANENT PHYSICAL STABILIZATION OR ESTABLISHED VEGETATION STABILIZATION BMPs ARE NOT CONSIDERED TO BE "EXPOSED" FOR PURPOSES OF THIS REQUIREMENT.
9. THERE SHALL BE A "WEATHER TRIGGERED" ACTION PLAN AND THE ABILITY TO DEPLOY STANDBY SEDIMENT CONTROL BMPs AS NEEDED TO COMPLETELY PROTECT THE EXPOSED PORTIONS OF THE SITE WITHIN 48 HOURS OF A PREDICTED STORM EVENT (A PREDICTED STORM IS DEFINED AS A FORECASTED, 50% CHANCE OF RAIN).
10. THE AMOUNT OF EXPOSED SOIL ALLOWED AT ONE TIME SHALL NOT EXCEED THAT WHICH CAN BE ADEQUATELY PROTECTED BY DEPLOYING STANDBY EROSION CONTROL AND SEDIMENT CONTROL BMPs PRIOR TO A PREDICTED RAINSTORM.

EROSION CONTROL BMPs		
EC-1	SCHEDULING	SCHEDULE PREPARED BY CONTRACTOR SHALL BE ON-SITE DURING CONSTRUCTION.
TEMPORARY SEDIMENT CONTROL		
SE-1	SILT FENCE	INSTALL WHERE SHOWN ON PLAN.
SE-5	FIBER ROLL	INSTALL WHERE SHOWN ON PLAN.
SE-6	GRAVEL BAG BERM	PLACE AS SHOWN ON PLAN.
SE-7	STREET SWEEPING AND VACUUMING	STREET SHALL BE SWEPT AND SEDIMENT COLLECTED AND PROPERLY DISPOSED OF, ON OR OFF-SITE, ON A DAILY BASIS.
SE-10	STORM DRAIN INLET PROTECTION	ONCE CONSTRUCTED, SURROUND RISERS WITH GRAVEL BAGS AND/OR CAP THE RISER TO REDUCE SEDIMENT INTRODUCTION TO THE AREA DRAIN SYSTEM. PROTECT DOWNSTREAM INLETS USING DI PROTECTION TYPE 3 OR 4.
WIND EROSION CONTROL		
WE-1	WIND EROSION CONTROL	WATER OR COVER MATERIAL SHALL BE USED TO ALLEVIATE DUST NUISANCE FROM ANY DISTURBED AREAS DURING CONSTRUCTION.
TRACKING CONTROL		
TC-1	STABILIZED CONSTRUCTION EXIT	CONSTRUCT WHERE SHOWN ON PLAN.
WASTE MANAGEMENT AND MATERIALS POLLUTION CONTROL		
WM-1	MATERIAL DELIVERY AND STORAGE	IF MATERIALS ARE STORED ON SITE, THEY SHALL BE STORED IN ORIGINAL MARKED CONTAINERS AND COVERED FROM RAIN AND WIND.
WM-2	MATERIAL USE	MATERIALS FOR CONSTRUCTION SHALL BE USED IN ACCORDANCE WITH PRODUCT DIRECTIONS.
WM-3	STOCKPILE MANAGEMENT	STOCKPILES OF SOIL OR OTHER LOOSE MATERIAL SHALL BE COVERED (i.e. USING PLASTIC SHEETING) TO ELIMINATE TRANSPORT VIA WIND OR STORM RUNOFF.
WM-4	SPILL PREVENTION AND CONTROL	AMPLE CLEAN-UP SUPPLIES FOR STORED MATERIALS SHALL BE KEPT ON-SITE. EMPLOYEES SHALL BE EDUCATED ON THE CLASSIFICATIONS OF SPILLS AND APPROPRIATE RESPONSES.
WM-5	SOLID WASTE MANAGEMENT	SOLID WASTE FROM CONSTRUCTION ACTIVITIES SHALL BE STORED IN APPROPRIATE CONTAINERS. FULL CONTAINERS SHALL BE DISPOSED OF PROPERLY.
WM-8	CONCRETE WASTE MANAGEMENT	AN ON-SITE CONCRETE WASHOUT AREA SHALL, BE CONSTRUCTED, USED, AND DISPOSED OF IN A MANNER WHICH MEETS THE REQUIREMENTS OF THE CITY.
WM-9	SANITARY/SEPTIC WASTE MANAGEMENT	ON-SITE FACILITIES SHALL BE PROVIDED AND MAINTAINED BY THE CONTRACTOR FOR THE DURATION OF THE PROJECT.
NON-STORMWATER MANAGEMENT		
NS-1	WATER CONSERVATION PRACTICES	MAINTAIN EQUIPMENT TO PREVENT UNINTENDED NON-STORMWATER DISCHARGES.
NS-3	PAVING AND GRINDING OPERATIONS	APPLY PERIMETER CONTROLS AND VACUUMING TO PREVENT NON-STORMWATER DISCHARGES.
NS-7	POTABLE WATER / IRRIGATION	EXERCISE CARE DURING CONSTRUCTION TO PREVENT UNINTENDED NON-STORMWATER DISCHARGES.
NS-12	CONCRETE CURING	APPLIES TO ALL CONCRETE CONSTRUCTION.
NS-13	CONCRETE FINISHING	APPLIES TO ALL CONCRETE CONSTRUCTION.

Worksheet C: Capture Efficiency Method for Volume-Based, Constant Drawdown BMPs

Step 1: Determine the design capture storm depth used for calculating volume				
1	Enter design capture storm depth from Figure III.1, *d* (inches)	d=	0.65	inches
2	Enter calculated drawdown time of the proposed BMP based on equation provided in applicable BMP Fact Sheet, *T* (hours)	T=	3	hours
3	Using Figure III.2, determine the "fraction of design capture storm depth" at which the BMP drawdown time (T) line achieves 80% capture efficiency, X_1	X_1=	0.26	
4	Enter the effect depth of provided HSCs upstream, d_{HSC} (inches) (Worksheet A)	d_{HSC}=	0	inches
5	Enter capture efficiency corresponding to d_{HSC}, Y_2 (Worksheet A)	Y_2=	0	%
6	Using Figure III.2, determine the fraction of "design capture storm depth" at which the drawdown time (T) achieves the equivalent of the upstream capture efficiency(Y_2), X_2	X_2=	0	
7	Calculate the fraction of design volume that must be provided by BMP, *fraction* = $X_1 - X_2$	fraction=	0.26	
8	Calculate the resultant design capture storm depth (inches), $d_{fraction}$ = *fraction* × *d*	$d_{fraction}$=	0.169	inches
9	SOC Only: When using this method for biofiltration sizing, check that the resulting volume in ponding plus pore spaces is at least 0.75× the remaining DCV (after accounting for upstream HSC/retention BMPs). (See Worksheet SOC-1)		N/A	
Step 2: Calculate the DCV				
1	Enter Project area tributary to BMP (s), *A* (acres)	A=	# #	sf
2	Enter Project Imperviousness, *imp* (unitless)	imp=	0.96	
3	Calculate runoff coefficient, *C= (0.75 x imp) + 0.15*	C=	0.87	
4	Calculate runoff volume, V_{design} = *(C x d $_{fraction}$ x A x 43560 x (1/12))*	V_{design}=	58	cu-ft

Supporting Calculations

Describe system:

Bioretention planter boxes with 7.5" surface ponding depth over 3" mulch over 18" planting mix layer over 24" gravel. To store 58 cubic feet on the surface of the planters, with a design ponding depth of 7.5 inches, 93 square feet of bioretention planter surface area is required.
The site is broken into two drainage areas; the north drainage area covers 35% of the project site and drains into two planter boxes in series with a combined surface area of 33 sq. ft, while the south drainage area (65% of the project site) drains into a single planter box with a surface area of 60 sq. ft.

Provide drawdown time calculations per applicable BMP Fact Sheet:

Toal Engineering proposes the use of planting mix with a long term drawdown time of 2.5 inches per hour, in compliance with the North Orange County TGD. The design ponding depth of 7.5 inches will draw down in 3 hours.

Graphical Operations

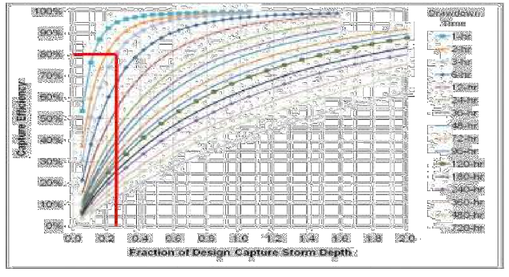

LEGEND

XX-X BMP DESIGNATION IN CALIFORNIA STORMWATER BMP HANDBOOK – CONSTRUCTION, LATEST EDITION, BY THE CALIFORNIA STORMWATER QUALITY ASSOCIATION.

GRAVEL BAG BERM SE-6
FIBER ROLL SE-5
SILT FENCE SE-1

NOTE

THE LOCATION AND TYPE OF EROSION AND SEDIMENT CONTROL MEASURES TO BE USED WILL CHANGE DURING THE COURSE OF CONSTRUCTION. THE CONTRACTOR SHALL IMPLEMENT THE CONTROLS NECESSARY TO PREVENT NON-STORMWATER, SEDIMENT, AND CONTAMINATED RUNOFF DISCHARGES FROM THE SITE AT ALL TIMES.

REGISTERED PROFESSIONAL ENGINEER ROBERT J. MCCARTHY No. 2490 Exp. 3/31/25 GEOTECHNICAL STATE OF CALIFORNIA
Signed 1/03/2024

REVIEW IS SUBJECT TO THE LIMITATIONS STATED IN THE REPORT DATED 5-5-2022, FILE NO: 8577-10 REPORT NO: R1-8577 R MCCARTHY CONSULTING, INC.

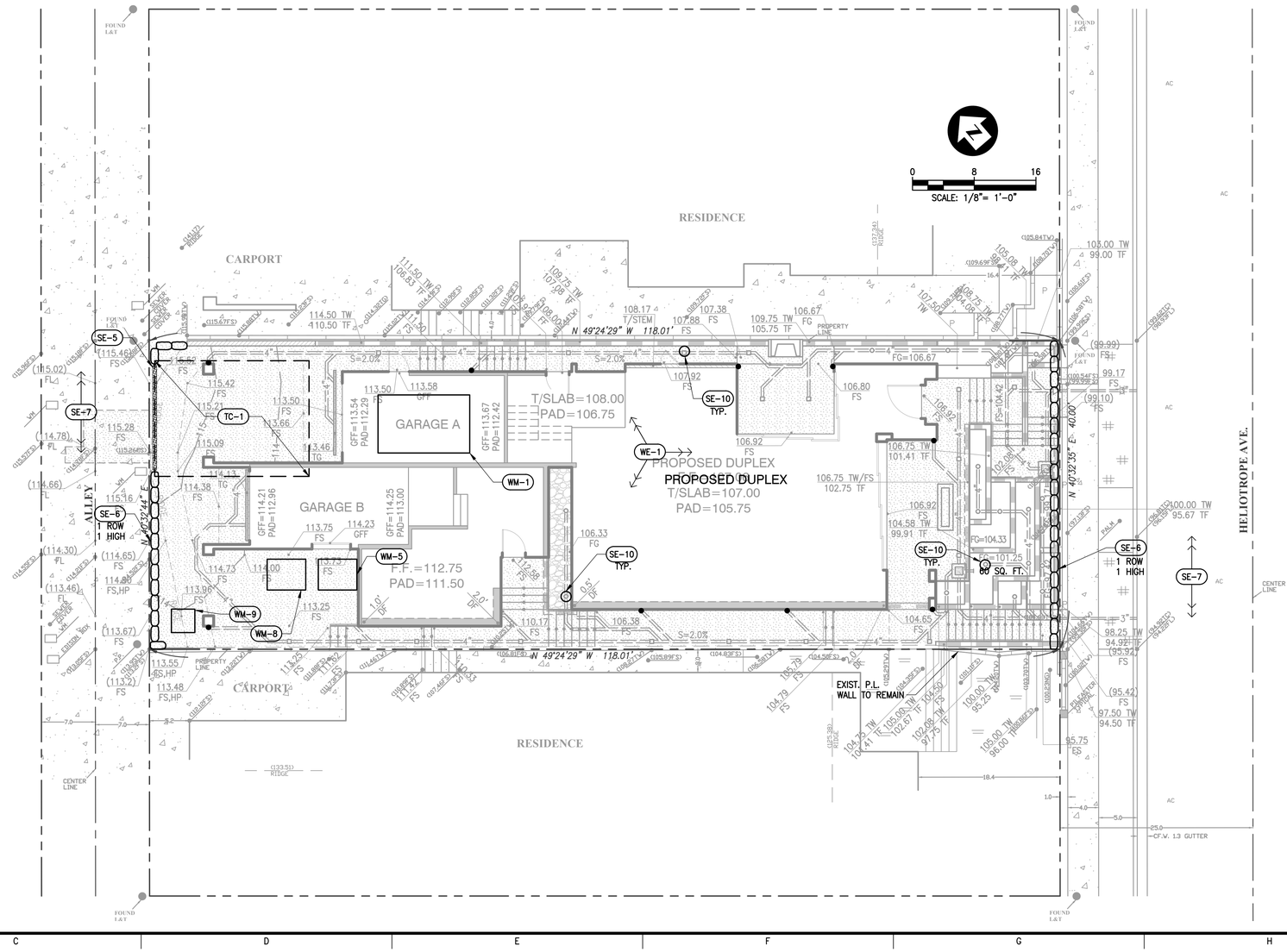

PLANS PREPARED BY:

TOAL ENGINEERING, INC.

CIVIL ENGINEERING
LAND SURVEYING
STORMWATER QUALITY

139 Avenida Navarro
San Clemente, CA 92672
949.492.8586
www.toalengineering.com

REGISTERED PROFESSIONAL ENGINEER ADAM L. TOAL No. 59275 EXP. 6-30-13 CIVIL STATE OF CALIFORNIA

ADAM L. TOAL
R.C.E. 59275
DATE: 12/26/23

PREPARED FOR:

JRC REAL ESTATE DEVLOPMENT
14930 ALONDRA BLVD.
LA MIRADA, CA 90638
TEL: (562) 623-9328

REVISIONS	BY	DATE	APVD.	DATE

HELIOTROPE DUPLEX

EROSION CONTROL PLAN

POR. LOTS 7 & 9, BLOCK 334, CORONA DEL MAR
407 HELIOTROPE AVENUE, CORONA DEL MAR, CALIFORNIA

DATE: 12/22/2023		H. SCALE: 1/8" = 1'	
SURVEY DATE: N/A		V. SCALE: N/A	
DRN.: B.J.F.		DWG. NO. C-3	
CHD.: M.F.B.			
APPD.: M.F.B.			
JOB NO. 23032	SHEET 3	OF 5	

12/22/2023 4:02:16 PM N:\23xx\23032 Leftbank 407 Heliotrope\Drawings\Civil\23032-gp-03.dwg

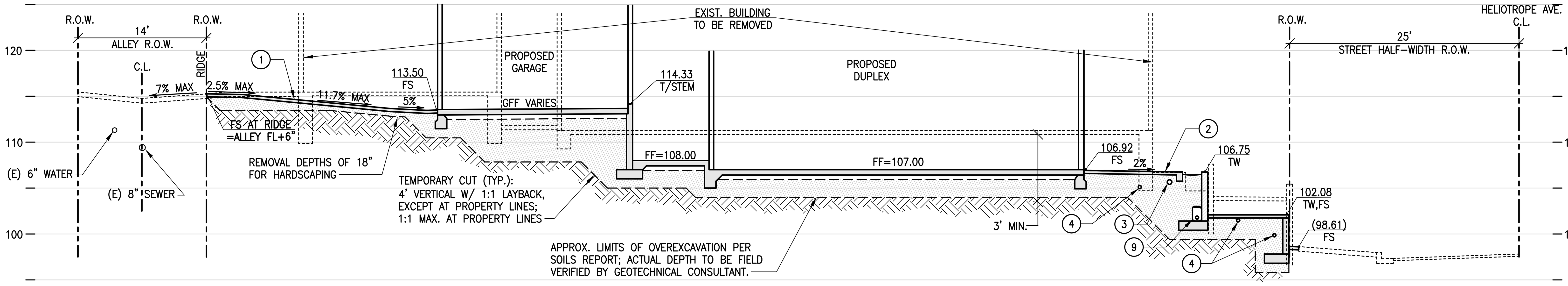

A / C-2 **SECTION**
SCALE: 1/8" = 1'-0"

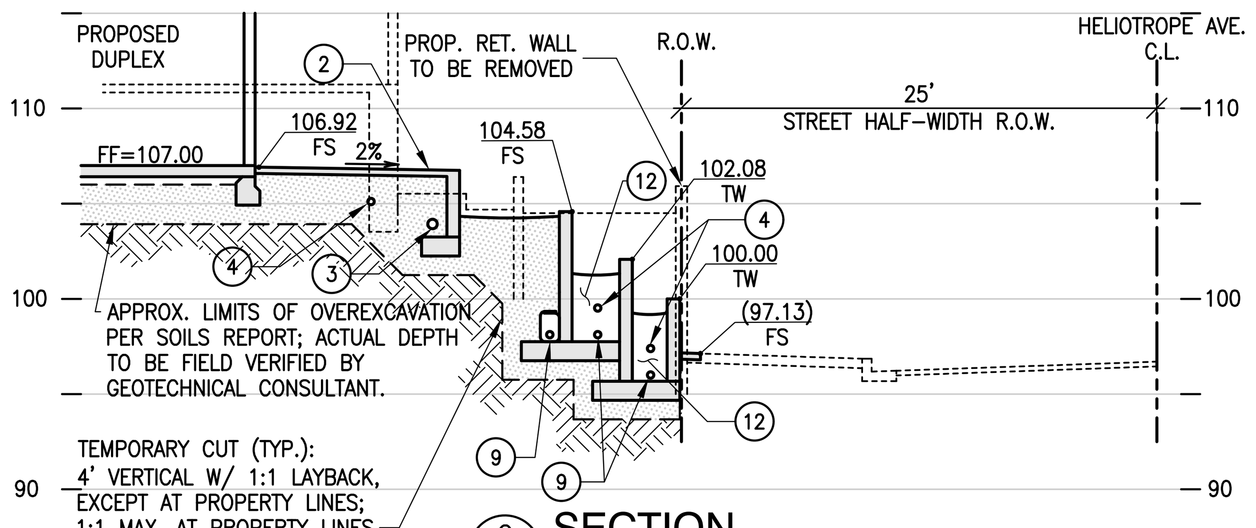

C / C-2 **SECTION**
SCALE: 1/8" = 1'-0"

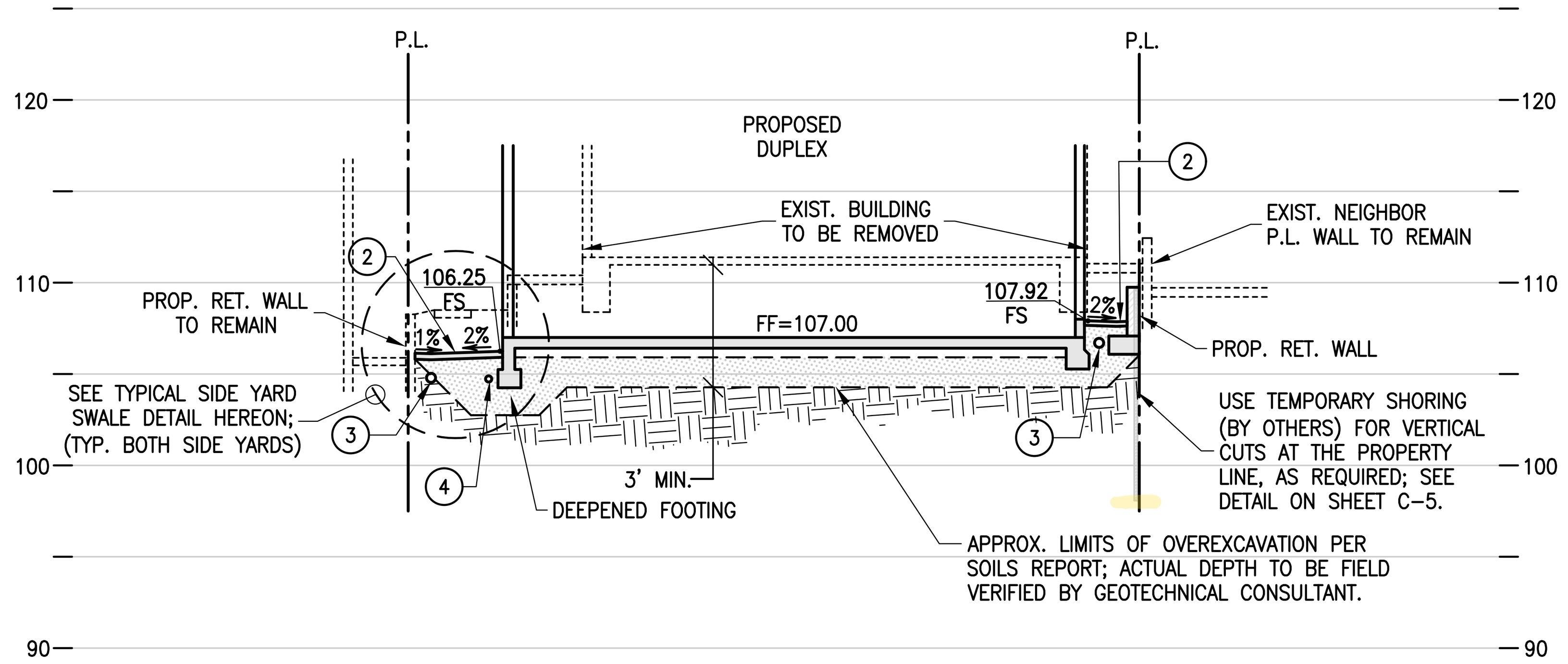

B / C-2 **SECTION**
SCALE: 1/8" = 1'-0"

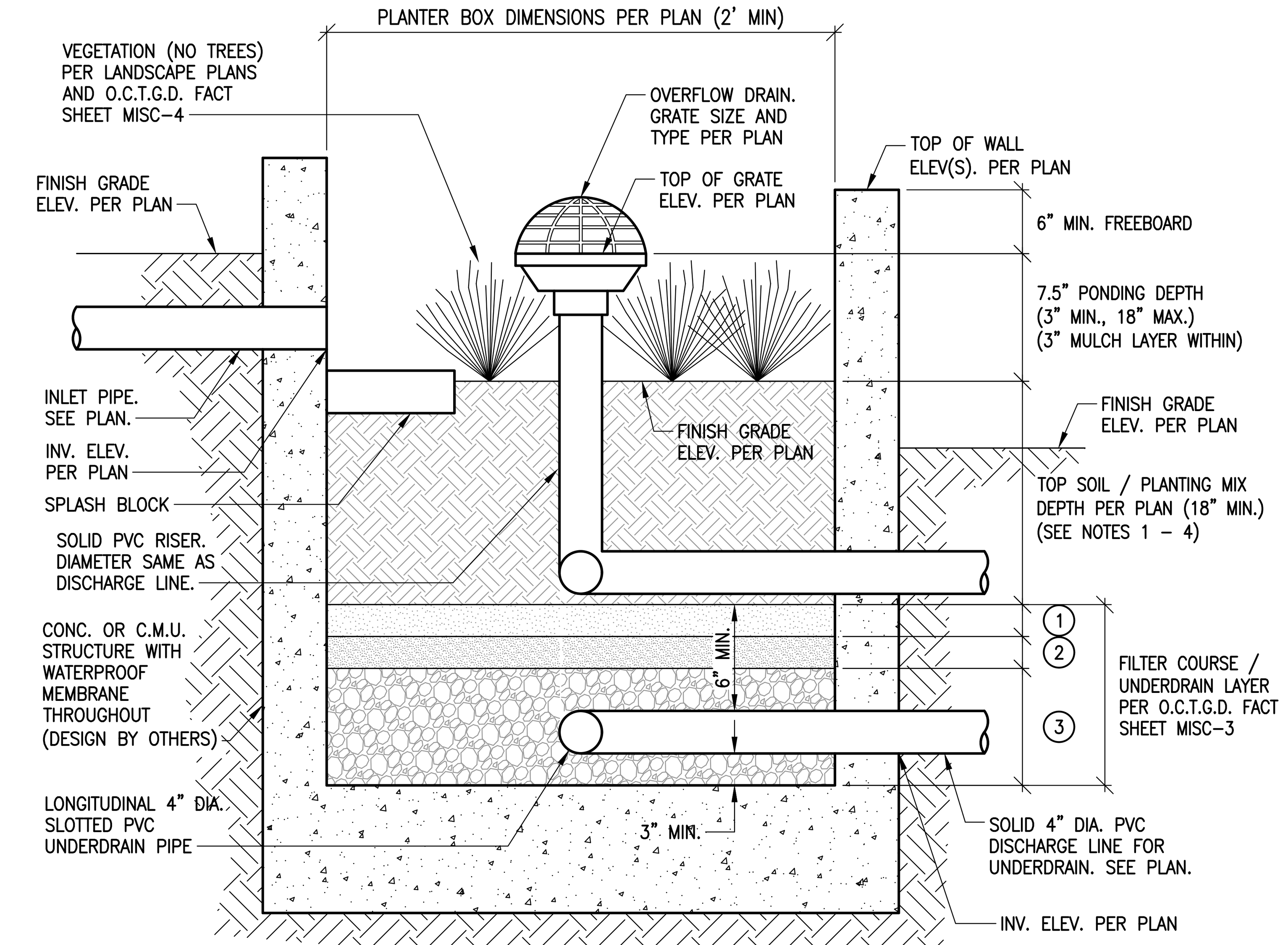

NOTES:
1. PLANTING MIX PER APPROVED WATER QUALITY MANAGEMENT PLAN. IF NO WATER QUALITY MANAGEMENT PLAN IS REQUIRED FOR THE PROJECT, PLANTING MIX SHALL BE PER ORANGE COUNTY T.G.D. FACT SHEET MISC-1.
2. MINIMUM INFILTRATION RATE PER APPROVED WATER QUALITY MANAGEMENT PLAN. IF NO WATER QUALITY MANAGEMENT PLAN IS REQUIRED FOR THE PROJECT, MIN. INFILTRATION RATE = 5"/HR.
3. PLANTING MIX SHALL BE INSTALLED PER MEDIA PROVIDER'S RECOMMENDATIONS AND SHALL ALLOW FOR SETTLEMENT OF THE MIX.
4. CIVIL ENGINEER APPROVAL OF PLANTING MIX AND FILTER COURSE / UNDERDRAIN MATERIALS REQUIRED PRIOR TO CONSTRUCTION OF PLANTER BOX.

(1) 3" WASHED ASTM C33 COARSE FILTER SAND
(2) 3" WASHED ASTM NO. 8 OR NO. 89 PEA GRAVEL
(3) WASHED AASHTO NO. 57 AGGREGATE GRAVEL LAYER

CERTIFICATIONS:
CIVIL ENGINEER APPROVAL REQUIRED AT FOLLOWING STAGES OF CONSTRUCTION:
1. FORMS (PRIOR TO POUR)
2. PERFORATED PIPE PRIOR TO BACKFILL..
3. INSTALLATION OF FILTER COURSE / UNDERDRAIN LAYER BEFORE PLACEMENT OF PLANTING MIX.

PLANTER WALL STRUCTURAL DESIGN BY OTHERS UNDER SEPARATE PLAN & PERMIT

(12) **DETAIL**
STORMWATER PLANTER BOX
NOT TO SCALE

REVIEW IS SUBJECT
TO THE LIMITATIONS
STATED IN THE REPORT DATED
5-5-2022, FILE NO: 8677-10
REPORT NO: R1-8677
R MCCARTHY CONSULTING, INC.

REGISTERED PROFESSIONAL ENGINEER ROBERT J. MCCARTHY No. 2490 Exp. 3/31/24 GEOTECHNICAL STATE OF CALIFORNIA
Signed 1/11/2024

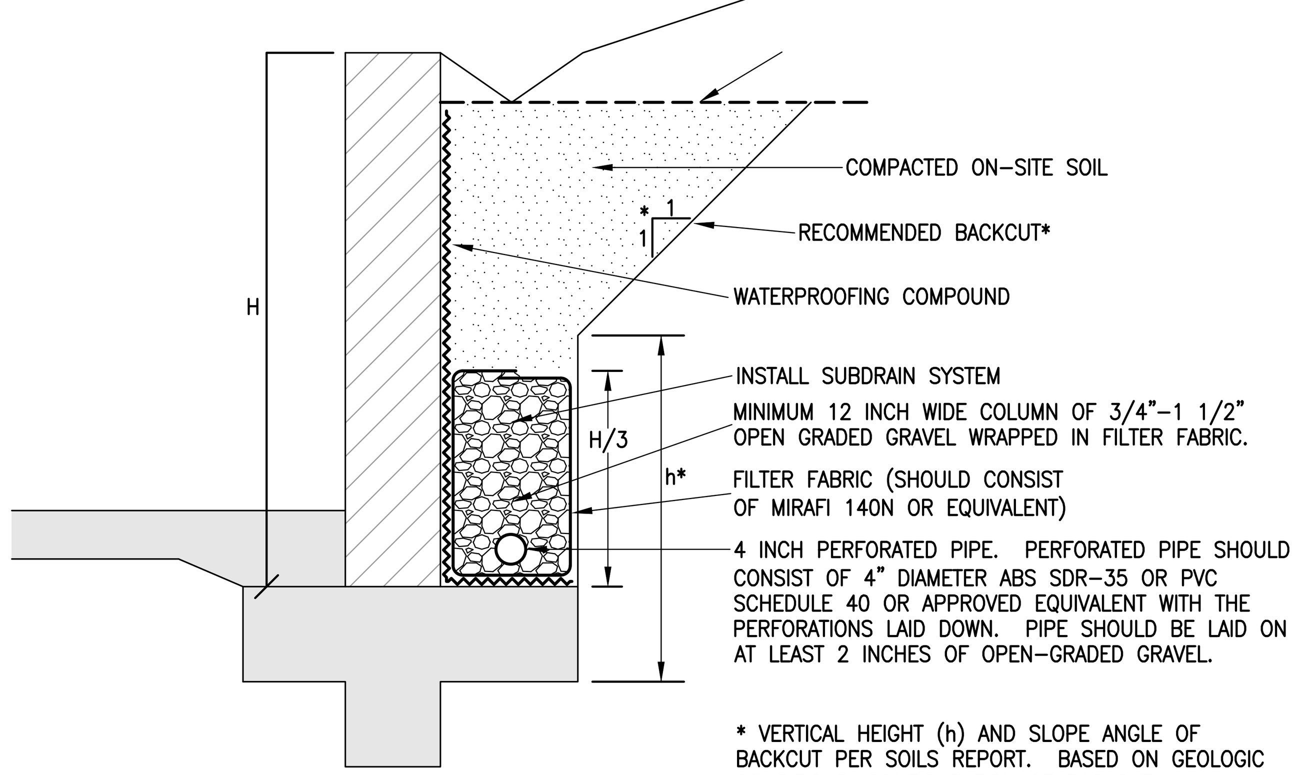

* VERTICAL HEIGHT (h) AND SLOPE ANGLE OF BACKCUT PER SOILS REPORT. BASED ON GEOLOGIC CONDITIONS, CONFIGURATION OF BACKCUT MAY REQUIRE REVISIONS. (i.e. REDUCED VERTICAL HEIGHT, REVISED SLOPE ANGLE, ETC.)

(9) **DETAIL**
TYPICAL RETAINING WALL SUBDRAIN DETAIL
PER R. McCARTHY CONSULTING, INC. SOILS REPORT
DATED MAY 5, 2022 (PROJECT: 8677-00)
NOT TO SCALE

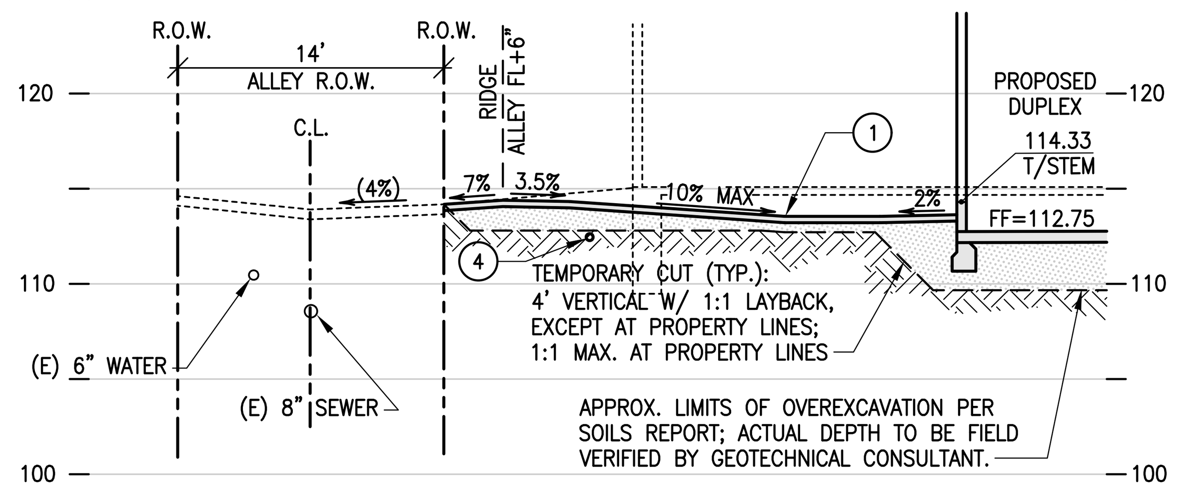

D / C-2 **SECTION**
SCALE: 1/8" = 1'-0"

CONSTRUCTION NOTES:

(1) CONSTRUCT DRIVEWAY. SEE DETAIL ON SHEET C-4 & LANDSCAPE PLANS.
(2) CONSTRUCT HARDSCAPE. SEE DETAIL ON SHEET C-4 & LANDSCAPE PLANS.
(3) UTILITY TRENCHING AND ALLEY RESURFACING PER CITY OF N.B. STD. 106-A.
(4) INSTALL 4" PVC SCH 40 OR SDR 35 PIPE DRAIN SYSTEM.
(5) INSTALL 6" FLAT GRATE (NDS 918B OR EQUAL) W/ RISER & ADAPTOR.
(6) INSTALL 6" ATRIUM GRATE (NDS 918B OR EQUAL) W/ RISER & ADAPTOR.
(7) CONNECT DOWNSPOUT TO DRAINAGE SYSTEM. SEE DETAIL ON SHEET C-4.
(8) CONSTRUCT PRIVATE DRAIN THROUGH CURB PER CITY OF N.B. STD. 184.
(9) INSTALL SUBDRAIN PER GEOTECHNICAL REPORT RECOMMENDATIONS.
(10) INSTALL 12" DRAINBOX (JENSEN PRECAST MODEL 1212 OR EQUAL).
(11) INSTALL 5" WIDE TRENCH DRAIN (NDS 864 OR EQUAL).
(12) CUSTOM BIOFILTRATION PLANTER BMP. SEE DETAIL ON SHEET C-4.
(13) INSTALL 1" WATER SERVICE AND METER PER CITY OF N.B. STD. 502.
(14) CONSTRUCT SEWER LATERAL W/ CLEANOUT PER CITY OF N.B. STD. 406.
(15) INSTALL CLEANOUT ON EXISTING SEWER LATERAL PER CITY OF N.B. STD. 406.

SECTION NOTES:

1. ACTUAL LIMITS OF EXCAVATION TO BE DETERMINED IN THE FIELD BY THE SOILS ENGINEER.
2. RECOMMENDATIONS TO STABILIZE AND STRENGTHEN COMPACTED FILL SHALL BE PROVIDED BY THE SOILS ENGINEER DURING GRADING.
3. TEMPORARY CONSTRUCTION SLOPES SHOWN HEREON ARE BASED ON RECOMMENDATIONS CONTAINED IN THE PROJECT SOILS REPORT. JOBSITE SAFETY IS THE RESPONSIBILITY OF THE CONTRACTOR, WHO IS RECOMMENDED TO IMPLEMENT SAFETY PRACTICES REQUIRED BY CAL/OSHA BASED ON EARTH MATERIALS EXPOSED DURING GRADING OPERATIONS. THIS MAY RESULT IN TEMPORARY CONSTRUCTION SLOPES DIFFERENT THAN THOSE SHOWN HEREON OR MAY REQUIRE SHORING.
4. RETAINING WALLS ARE SHOWN FOR REFERENCE ONLY AND ARE TO BE CONSTRUCTED PER SEPARATE PLANS AND PERMIT.
5. FOR FOOTING AND FOUNDATION PLANS, SEE STRUCTURAL DRAWINGS.
6. RETAINING WALL BACKFILL SHALL CONFORM TO THE SOILS REPORT AND THE STRUCTURAL DRAWINGS.

NOTES:
1. OTHER MINIMUM VALUES MAY APPLY BASED ON ARCHITECTURAL DETAILS AND/OR GEOTECHNICAL RECOMMENDATIONS.

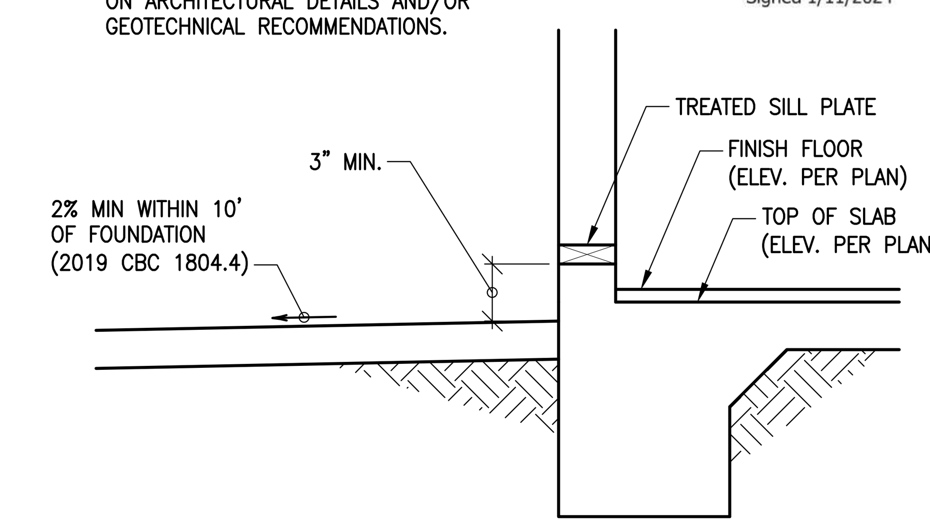

DETAIL
TYPICAL BUILDING DRAINAGE AT HARDSCAPE
NOT TO SCALE

NOTES:
1. THIS DETAIL IS FOR REFERENCE ONLY TO ILLUSTRATE SOILS REPORT REQUIREMENTS. HARDSCAPE DESIGN BY OTHERS.
2. SEE SOILS REPORT FOR OVEREXCAVATION, SUBGRADE PREPARATION, AND CEMENT TYPE REQUIREMENTS.

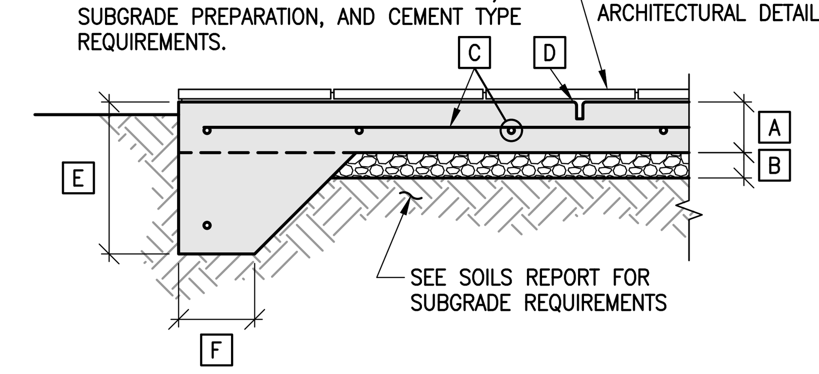

		DRIVEWAYS	HARDSCAPE
A	MIN. SLAB THICKNESS	4"	4"
B	MIN. AGG. BASE THICKNESS	–	–
C	MIN. REINFORCEMENT (O.C. / E.W.)	#3@18"	#3@18"
D	MAX. SAWCUT OR COLD JT. SPACING	10'	6'
E	THICKENED EDGE DEPTH	V.I.F.*	V.I.F.*
F	THICKENED EDGE WIDTH	V.I.F.*	V.I.F.*

* VERIFY IN FIELD

(1)(2) **DETAIL**
TYPICAL DRIVEWAY / HARDSCAPE SECTION
PER R. McCARTHY CONSULTING, INC. SOILS REPORT
DATED MAY 5, 2022 (PROJECT: 8677-00)
NOT TO SCALE

NOTES:
1. OTHER MINIMUM VALUES MAY APPLY BASED ON ARCHITECTURAL DETAILS AND/OR GEOTECHNICAL RECOMMENDATIONS.

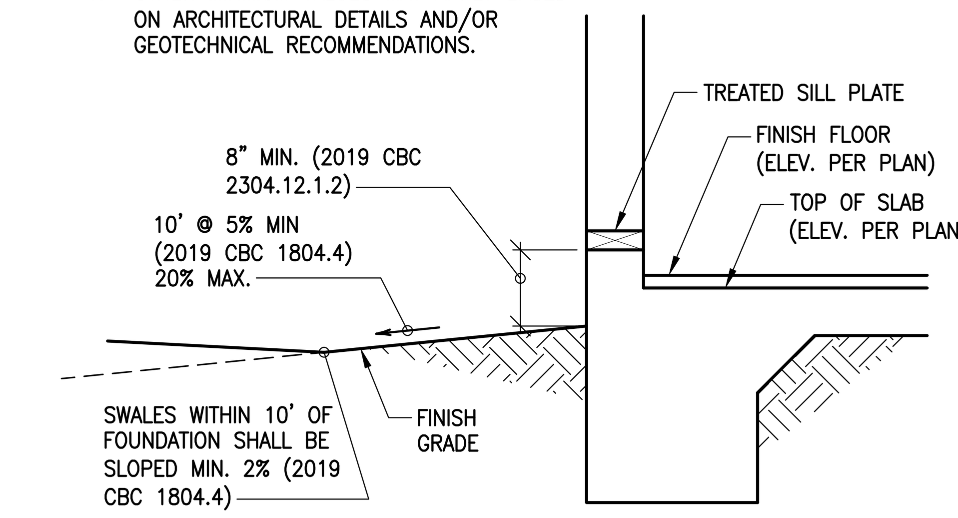

DETAIL
TYPICAL BUILDING DRAINAGE AT LANDSCAPING
NOT TO SCALE

NOTE: DO NOT USE 90° ELLS OR TEES IN DRAINLINE SYSTEM

MAIN DIA.	RISER DIA.
3"	3"
> 3"	4" MIN. (U.N.O.)

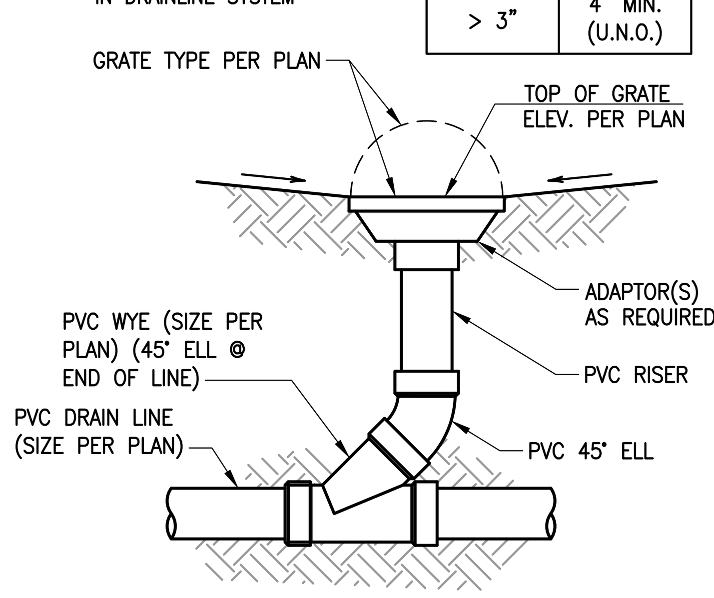

(5)(6) **DETAIL**
TYPICAL DRAIN INLET
NOT TO SCALE

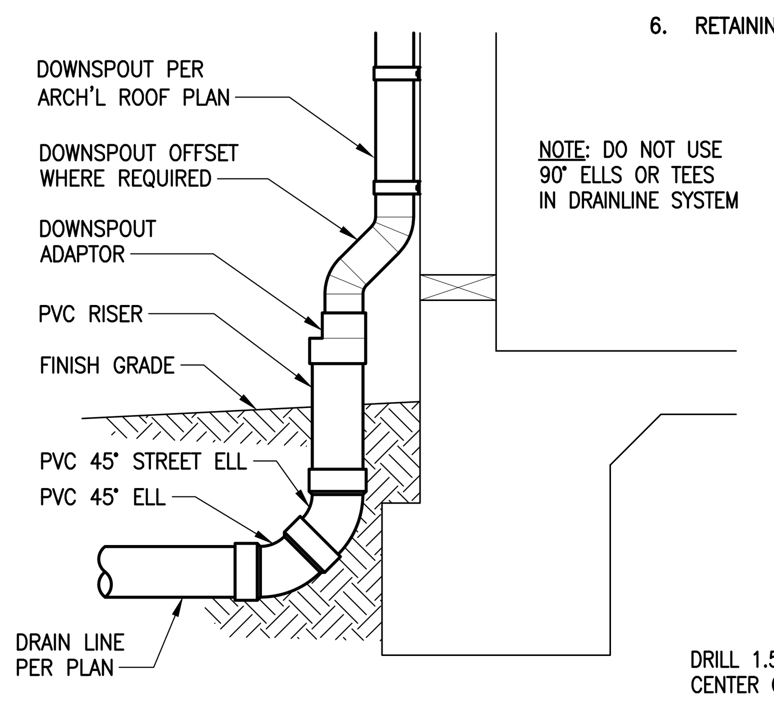

NOTE: DO NOT USE 90° ELLS OR TEES IN DRAINLINE SYSTEM

(7) **DETAIL**
DOWNSPOUT CONNECTION
NOT TO SCALE

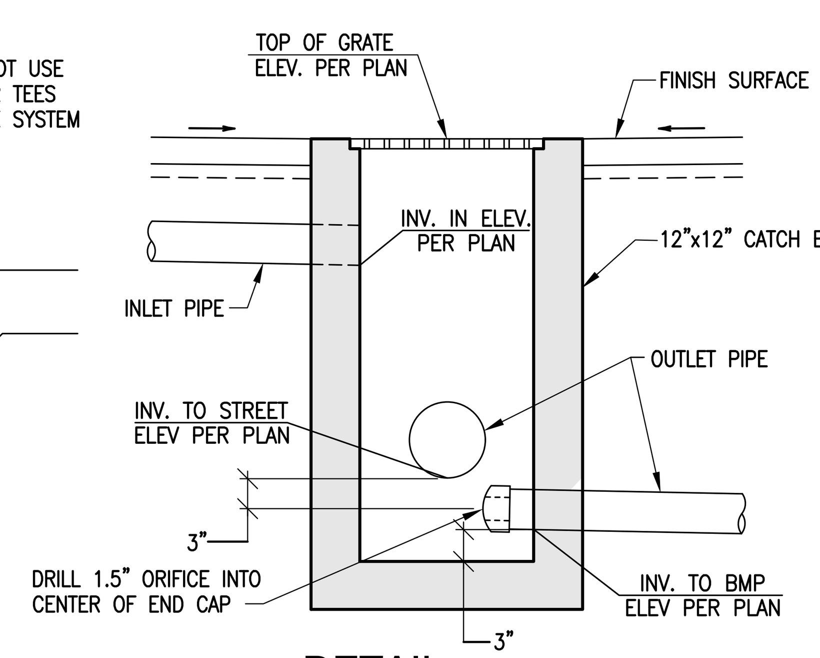

(10) **DETAIL**
CONCRETE DRAINBOX
NOT TO SCALE

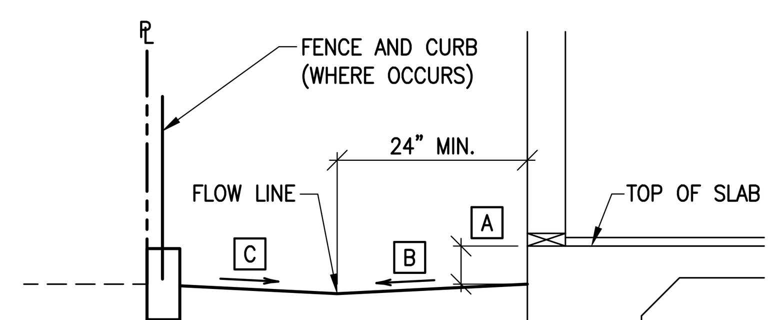

	LANDSCAPE	HARDSCAPE
A*	8" MIN.	3.5" MIN.
B	5% MIN.	2% MIN.
C	2% MIN.	1% MIN.

*SEE ARCHITECTURAL PLANS FOR WEEP SCREED AND WATERPROOFING DETAILS

DETAIL
TYPICAL SIDE YARD SWALE
NOT TO SCALE

PLANS PREPARED BY:
TOAL ENGINEERING, INC.
CIVIL ENGINEERING
LAND SURVEYING
STORMWATER QUALITY
139 Avenida Navarro
San Clemente, CA 92672
949.492.8586
www.toalengineering.com

REGISTERED PROFESSIONAL ENGINEER ADAM L. TOAL No. 59275 CIVIL STATE OF CALIFORNIA
ADAM L. TOAL
R.C.E. 59275
DATE: 1/10/24

PREPARED FOR:
JRC REAL ESTATE
DEVLOPMENT
14930 ALONDRA BLVD.
LA MIRADA, CA 90638
TEL: (562) 623-9328

BY	DATE	APVD.	DATE

REVISIONS

HELIOTROPE DUPLEX

SECTIONS AND DETAILS

POR. LOTS 7 & 9, BLOCK 334, CORONA DEL MAR
407 HELIOTROPE AVENUE, CORONA DEL MAR, CALIFORNIA

DATE: 12/22/2023	H. SCALE: N/A
SURVEY DATE: N/A	V. SCALE: N/A
DRN.: B.J.F.	DWG. NO.
CHD.: M.F.B.	C-4
APPD.: M.F.B.	
JOB NO. 23032	SHEET 4 OF 5

1/10/2024 12:41:02 PM N:\230xx\23032 Leftbank 407 Heliotrope\Drawings\Civil\23032-gp-04.dwg

backfill materials and to a sufficient depth to avoid surcharge of the adjacent walls or foundations.

9. Retaining wall and foundation plans will require further review by this office and should be forwarded to us for review, as they are prepared, in order to provide specific load information for proposed walls and footings.

10. No active faults are known to transect the site and, therefore, the site is not expected to be adversely affected by surface rupturing. It will, however, be affected by ground motions from earthquakes during the design life of the residence. The potential for seismically-induced liquefaction or landsliding affecting the proposed residence is considered to be very low.

11. Groundwater is not expected to be a concern during construction. Suitable drainage elements need to be installed at retaining walls to mitigate possible transient seepage.

12. Adverse surface discharge onto or off the site is not anticipated provided proper civil engineering design and post-construction site grading are implemented.

13. Concentrated water infiltration into the on-site near surface soils is not practical or advisable due to low permeability rates in the fine-grained soils encountered during our field investigation.

14. The proposed residence may be supported by a conventional, strengthened slab and foundation system designed in consideration of the expansive soil conditions and supported entirely within geotechnically approved recompacted fill materials.

RECOMMENDATIONS

Site Preparation and Grading

1. General

Site grading should be performed in accordance with the requirements of the City of Newport Beach, the recommendations of this report, and the Standard Grading Guidelines of Appendix D. All excavations should be supervised and approved in writing by a representative of this firm.

2. Demolition and Clearing

Deleterious materials, including materials from the demolition, organic materials and trash, should be removed and disposed of off-site. Subsurface elements of demolished structures should be completely removed, including any basements, foundations, septic tanks, cisterns, abandoned utility lines, etc.

3. Subgrade Preparation

Excavations should be made to remove any soils disturbed by demolition, undocumented fill, or backfill, and surficial materials where encountered within the building areas. Removal depths of at least 3 feet, followed by 6-inches of scarification and recompaction, should be made within the building footprint and the influence zone of footings. Excavations should extend to a depth that provides at least 12-inches of compacted fill below footings. Deeper excavations may be necessary to remove unsuitable materials, if encountered. Although not encountered in our exploratory borings, significantly dry or porous native soil zones should be excavated to suitable materials if exposed during grading. Excavations should be replaced with compacted engineered fill. The horizontal limits of overexcavation should be outlined by the Geotechnical Engineer based on grading and foundation plans when these are available for review.

Shoring may be required to accomplish remedial grading and construction of new improvements due to the presence of existing retaining walls and grade differences along adjoining lots.

Abandoned, buried cisterns and similar buried chambers, vaults or wells may be encountered during grading at the subject site. These may generally be removed and replaced with compacted fill or filled with sand-cement slurry upon approval, observation and testing by the Geotechnical Consultant.

Removals below significant hardscape improvements such as driveways, patios, and sidewalks should be sufficient to remove existing fill or disturbed on-site soil. Removal depths of about 1.5 feet are expected to be sufficient for hardscape.

The depths of overexcavation should be reviewed by the Geotechnical Engineer or Geologist during the actual construction. Any surface or subsurface obstructions, or questionable material encountered during grading, should be brought immediately to the attention of the Geotechnical Engineer for recommendations.

4. Fill Soils

The on-site soils are anticipated to be suitable for use as compacted fill (but not as retaining wall backfill); however, clay and diatomaceous materials may be difficult to moisture condition and utilize in the fill. The Contractor should plan on possible difficult mixing and compaction of the on-site materials. Uniform mixing and the use of a compactor that provides a broad, uniform weight, such as with track-mounted equipment or a sheepsfoot roller (preferred over narrow tire wheel rolling) will generally be more efficient for compaction. Fine-grained materials will also impact the expansion potential of the foundation soils. Fill soils should be free of debris, organic matter, cobbles and concrete fragments greater than 6-inches in diameter.

Soils imported to the site for use as fill below foundation and slab areas should be predominantly granular, non-expansive, non-plastic and approved by the Geotechnical Engineer prior to importing.

On-site materials should be placed at above optimum moisture content and compacted under the observation and testing of the Soil Engineer. Moisture contents should be maintained in the time period between completion of grading and construction of the foundation and slab. In our experience, periodic watering of the exposed graded surface soils will help to minimize tension cracks and reduce the effort required for pre-soaking.

The recommended minimum density for compacted material is 90 percent of the maximum density as determined by ASTM D1557.

5. Shrinkage and Bulking

Shrinkage losses are not anticipated; however, clearing losses from demolition could result in volume reductions for available fill soils. Some bulking of clay materials may occur when placed at required moisture contents. The volume change due to bulking will be dependent on the field moisture content at the time of grading and the conditions during fill compaction.

6. Expansive Soils

Expansion tests should be performed during grading to determine the expansion potential of the processed fill materials.

7. Compaction Standard

Fill materials should be placed at above optimum moisture content and compacted under the observation and testing of the Soil Engineer. The recommended minimum density for compacted material is 90 percent of the maximum density as determined by ASTM D1557. The recommended moisture content is above optimum per the recommendations herein.

8. Temporary Construction Slopes

Temporary slopes exposing on-site materials should be cut in accordance with Cal/OSHA Regulations. It is anticipated that the exposed on-site earth materials may be classified as Type B soil, and temporary cuts of 1:1 (horizontal: vertical) above a 4-foot-high, single bench is expected be appropriate for trenching. Along property lines, cuts of 1:1 or flatter are typically prudent and are required by the City of Newport Beach. The material exposed in temporary excavations should be evaluated by the Contractor and Geotechnical Consultant during excavation and construction.

Lateral support of adjacent public and private property improvements should be maintained during grading and construction. Retaining wall design and construction should consider potential property line constraints.

The safety and stability of temporary construction slopes and cuts is deferred to the General Contractor, who should implement the safety practices as defined in Section 1541, Subchapter 4, of Cal/OSHA T8 Regulations (2006). The Geotechnical Consultant makes no warranties as to the stability of temporary cuts. Soil conditions may vary locally and the Contractor(s) should be prepared to remedy local instability if necessary. Contract Documents should be written in a manner that places the Contractor in the position of responsibility for the stability of all temporary excavations. Stability of excavations is also time dependent. Unsupported cuts should not be allowed to dry out and should not be left open for extended time periods.

Foundation Design - Design of Footings

General

It is anticipated that foundation elements for the residence will bear in competent recompacted fill and will utilize a conventional, strengthened footing and grade beam system designed for the potential expansive soil conditions.

The prepared subgrade materials are expected to consist of processed fill materials and exhibit a medium expansion potential. When removed, mixed and replaced as compacted fill the materials are expected to be in the medium expansion range; however, this will depend on the distribution of these materials on the site. The following recommendations are based on the geotechnical data available and are subject to revision based on conditions actually encountered in the field.

Foundations and slabs should be designed for the intended use and loading by the Structural Engineer. Our recommendations are considered to be generally consistent with the standards of practice. They are based on both analytical methods and empirical methods derived from experience with similar geotechnical conditions. Our recommendations do not account for factors such as thermal or other internal concrete forces, concrete mix designs, or applied external loads. These recommendations are considered the minimum necessary for the likely soil conditions and are not intended to supersede the design of the Structural Engineer or criteria of governing agencies.

a. Bearing Capacity for Conventional Foundations

The allowable bearing capacity for conventional spread and/or continuous footings having a minimum width of 15-inches and founded a minimum of 24-inches below the lowest adjacent grade in recompacted fill should not exceed 1,800 pounds per square foot. This value may be increased by one-third for short-term wind or seismic loading. All pad footings should be tied by grade beams in not less than two

directions (north-south/ east-west). A continuous perimeter footing to a minimum depth of 24-inches is recommended to reduce lateral moisture transfer below the foundation and slab. A grade beam to a depth of 24-inches should also be poured along garage door openings. Actual footing depths and widths should be governed by CBC requirements and the structural engineering design.

b. Settlement

Settlement is anticipated to be less than ¾-inch total and ¼-inch differential between adjacent similarly loaded footings (30-foot span), provided that the recommended site grading is implemented first. These estimates should be confirmed when structural engineering plans are prepared and foundation load conditions are determined.

c. Lateral Resistance

Lateral loads for foundation and slab design may be resisted by passive pressure forces developed in front of footings and by lateral sliding resistance acting at the base of foundation elements. These load bearing values are to be used with the allowable stress design load combinations specified in CBC, Section 1605.3. An allowable lateral bearing pressure of 150 pounds per square foot per foot of depth equivalent fluid pressure may be assumed. Resistance to sliding can be calculated using a cohesion value of 130 pounds per square foot of contact area to a maximum value of one-half the dead load. These values may be used in combination per CBC 2019, Section 1806.3.1. The values for lateral load resistance may be increased by one-third for the alternative basic load combinations of CBC, Section 1605.3.2, that include wind or seismic loads.

d. Footing Reinforcement

Two No. 5 bars should be placed at the top and two at the bottom of continuous footings in order to resist potential movement due to various factors such as subsurface imperfections and seismic shaking.

e. Footing Setbacks from Retaining Walls

Foundations should be deepened to provide a sufficient embedment to avoid surcharge of any retaining walls in the vicinity. In addition, foundations should not achieve support on undocumented backfill material. In general, foundations should extend below a plane extending up from the bottom of adjacent wall footings at an angle of 2:1 (Horizontal: Vertical).

Seismic Design

Based on the geotechnical data and site parameters, the following table is provided based on ASCE/SEI 7-16 using the ASCE Hazard Tool to satisfy the 2019 CBC design criteria. A site specific Ground-Motion Hazard Analysis (GMHA) was not performed for the site.

Site and Seismic Design Criteria For 2019 CBC

Design Parameters	Recommended Values
Site Class	D * (Stiff soil)
Site Longitude (degrees)	-117.874318 W
Site Latitude (degrees)	33.598424 N
Ss (g)	1.358
S1 (g)	0.481
SMs (g)	1.358
SM1 (g)	0.875
SDs (g)	0.905
SD1 (g)	0.583
Fa	1
Fv	1.819
Seismic Design Category	D

** Per ASCE 7-16, Section 11.4.8, the above values may be used provided the value of the seismic response coefficient Cs is determined by Eq. (12.8-2) for values of T ≤ 1.5Ts and taken as equal to 1.5 times the value computed in accordance with either Eq. (12.8-3) for TL ≥ T > 1.5Ts or Eq. (12.8-4) for T > TL. This is due to the value of S1 greater than or equal to 0.2 g for this site. The values above are generally applicable for typical residential structures. The Structural Engineer should verify that Section 11.4.8 is satisfied per the above.*

A Site-Specific Ground Motion Hazard Analysis (GMHA) may be beneficial for this project as part of the structural design. A Site-Specific GMHA can be performed at an additional cost if requested.

Supporting documentation is also included in a previous section of this report, Site Classification for Seismic Design, and in Appendix E.

Slab-On-Grade Construction

Concrete slabs should be designed in accordance with the 2019 CBC. The on-site soils are expected to exhibit a medium expansion potential based on our findings. Concrete floor slabs should be at least 7-inches thick (actual). Slabs should consist of properly reinforced concrete materials. Reinforcement should be in accordance with the structural engineering design; however, unreinforced concrete slabs are not recommended. Therefore, as a minimum, reinforcement should consist of No. 4 bars placed at 12-inches on center in both directions at the center-height of the slab.

Slabs should be underlain by 4-inches of open-graded gravel. Slab underlayment is deferred to the project Architect; however, in accordance with the American Concrete Institute, we suggest that slabs be underlain by a 15-mil thick vapor retarder/barrier (Stego Wrap or equivalent) placed over a layer of woven geofabric, such as Mirafi 140N, covering the gravel. The slab section underlayment should be in general accordance with the requirements of ASTM E1745 and E1643. Slab subgrade soils should be pre-soaked to 130 percent of optimum moisture content to a depth of 18-inches prior to placement of the vapor retarder. All subgrade materials should be geotechnically approved prior to placing the gravel for the slab underlayment.

Exterior flatwork elements should be a minimum 4-inches thick (actual) and reinforced with No. 3 bars at 18-inches on center both ways. Subgrade soils should be pre-soaked as indicated above prior to placing concrete.

Lateral Earth and Bearing Pressures for Retaining Walls

Design lateral loading values for cantilevered retaining walls should be based upon the following:

Foundations

Bearing Capacity	= 1,800 psf (24-inch embedment into undisturbed Terrace deposits)

Note: See applicable text above where deepened foundations are required in slope or wall areas.

Lateral Earth Pressures

Active Earth Pressure	= 55 psf/ft (level backfill)
Active Earth Pressure	= 70 psf/ft (2:1 sloping backfill)
Restrained Condition	= 75 psf/ft at-rest loading (level bfill, on-site soil)
Passive Earth Pressure	= 150 psf/ft (for slopes - ignore upper 2 ft downhill side)
Resistance to Sliding	= Cohesion value of 130 pounds per square foot of contact area to a maximum value of one-half the dead load

Other topographic and structural surcharges should be addressed by the Structural Engineer, as appropriate. Stacked walls should include applied surcharges from the uphill walls as appropriate.

Structural Design of Retaining Walls

1. Earthquake Loads on Retaining Walls

The structural engineer should determine which retaining walls at the site within their purview will be subject to design lateral loads due to earthquake events. Section 1803.5.12 of the 2019 CBC states that the geotechnical investigation shall include the determination of dynamic seismic lateral earth pressures on foundation walls and retaining walls supporting more than 6 feet (1.83 m) of backfill height due to design earthquake ground motions.

Walls retaining a level backfill condition may be considered using an additional dynamic load (ΔP_{ae}) of 34 pounds per cubic foot equivalent fluid pressure.

This force is presumed to act at 0.3*H* above the base of the wall (Al Atik and Sitar, ASCE 2010). This value is preliminary and we recommend that each wall be evaluated individually as plans are prepared. Note that the load diagrams and lateral pressures may vary based on wall height, orientation and backfill conditions. We therefore recommend that structural design not proceed until each wall is addressed by the geotechnical engineer based on the planned retaining wall configurations.

2. Foundation Bearing Values for Walls

Foundations for retaining walls may be designed in accordance with the recommendations provided herein for footings, and should be embedded in competent, undisturbed compacted fill at the minimum recommended depths.

3. Wall Backfill

The expansive on-site soils are generally not suitable for use as retaining wall backfill for new walls. Imported backfill, if used, should consist of select, non-expansive sand or gravel. Gravel may consist of pea gravel or crushed rock. Where space for compaction equipment is adequate, on-site or imported granular, non-expansive sand materials may be compacted into place in thin lifts per the compaction requirements provided herein. Imported pea gravel or crushed rock should be placed in lifts and tamped or vibrated into place. The lift thickness for gravel is dependent on the type of material and method of compaction. Gravel lifts of 18- to 24-inches or less are recommended. The Geotechnical Engineer should observe the backfill placement of soil or gravel behind each wall. Approval of wall backdrains should be obtained prior to backfill. Gravel wall backfill material should be separated from on-site soil materials, along back cuts and at

interfaces with other materials with a suitable filter fabric such as Mirafi 140N and capped with on-site soil or concrete.

Fill and backfill soils should be free of debris, organic matter, cobbles and rock fragments greater than 6-inches in diameter. Fill materials should be placed in 6- to 8-inch maximum lifts at above optimum moisture content and compacted under the observation and testing of the Soil Engineer. The recommended minimum density for compacted material is 90 percent of the maximum dry density as determined by ASTM D1557. Field density tests should be performed at intervals of 2 vertical feet or less within the backfill zone and in accordance with agency requirements at the time of grading.

4. Subdrains

An approved foundation subdrain system should be used to achieve control of seepage forces behind retaining walls. The details of such subdrain systems are deferred to the Wall Designer, Builder or Waterproofing Consultant. The subdrain is not a substitute for waterproofing. Water in subdrain systems should be collected and delivered to suitable disposal locations or facilities. Additional recommendations may be provided when plans are available.

Exterior retaining walls should be provided with an approved drain at the base of the backfill. Subdrains should consist of a 4-inch diameter perforated pipe (Schedule 40 or similar) surrounded by at least 1 cubic foot per foot of 3/4-inch gravel wrapped in geofabric (Mirafi 140N or similar). Perforations should be placed down and filter fabric should be lapped at least 12-inches at seams.

Shotcrete walls may incorporate an approved drainage board material with an outlet pipe at the base installed per the manufacturer's recommendations.

Weep holes or open head joints may be included for low-height garden walls with a height of less than 30-inches as an alternative to a pipe subdrain; however, the geofabric wrapped gravel burrito at the base of the wall is recommended to reduce clogging of the weep openings.

5. Dampproofing and Waterproofing

Waterproofing should be installed in accordance with the architectural specifications or those of a waterproofing consultant. Waterproof systems and materials should be installed in accordance with manufacturer's recommendations, based on geologic conditions. The criteria in Section 1805 of the 2019 CBC should be followed as a minimum.

Hardscape Design and Construction

Hardscape improvements may utilize conventional foundations in compacted fill. Such improvements should be designed in accordance with the foundation recommendations presented above and should consider the expansion potential of the on-site soils. Cracking and offsets at joints are likely; however, occurrence may be minimized by appropriate drainage and the use of thickened edge beams to limit moisture transfer below slabs.

Concrete flatwork should be divided into as nearly square panels as possible. Joints should be provided at maximum 6 feet intervals to give articulation to the concrete panels (shorter spacing is recommended if needed to square the panels).

Landscaping and planters adjacent to concrete flatwork should be designed in such a manner as to direct drainage away from concrete areas to approved outlets. Planters located adjacent to principal foundation elements should be sealed and drained; this is also important if they are near retaining wall backfills.

Flatwork elements should be a minimum 4-inches thick (actual) and reinforced with No. 3 bars 18-inches on center both ways. Subgrade soils should be pre-soaked to 130 percent of optimum moisture to a depth of 18-inches and geotechnically approved prior to placement of concrete. Maintaining the graded moisture content and preventing desiccation of the subgrade soils through periodic watering of the exposed soils is recommended.

Concrete Construction Components in Contact with Soil

The on-site soils are expected to have a low soluble sulfate content based on the results of laboratory testing, which indicated less than 0.10 percent soluble sulfate. Ordinary Type II cement is, therefore, anticipated to be suitable for concrete in contact with the subgrade soils. A minimum design strength of 4,000 psi and water to cement ratio of 0.5 maximum may be considered for flooring moisture considerations but is not required for sulfate considerations. It is recommended that a Concrete Expert be retained to design an appropriate concrete mix to address the structural requirements. In lieu of retaining a Concrete Expert, it is recommended that the 2019 CBC, Section 1904 and 1905, be utilized which refers to ACI 318. The sulfate testing result is presented in the attached Appendix C, Laboratory Test Results.

Metal Construction Components in Contact with Soil

Metal rebar encased in concrete, iron pipes, copper pipes, lift shafts, air conditioner units, etc. that are in contact with soil or water that permeates the soil should be protected from corrosion that may result from salts contained in the soil. Recommendations to mitigate damage due to corrosive soils, if needed, should be provided by a qualified Corrosion Specialist.

Foundation Excavations

All excavations should be observed by the Geotechnical Engineer prior to placement of forms, reinforcement, and concrete for verification of conformance with the intention of these recommendations. All excavations should be trimmed neat, level, and square. All loose or sloughed material should be removed prior to the placement of concrete. Materials from footing excavations should not be spread in house slab-on-grade areas unless compacted and tested.

Surface and Subsurface Drainage

1. Finished Grade and Surface Drainage

Finished grades should be designed and constructed so that no water ponds in the vicinity of footings. Drainage design in accordance with the 2019 CBC, Section 1804.4, is recommended or per local City requirements. Roof gutters should be provided and outflow directed away from structures in a non-erosive manner as specified by the project Civil Engineer or Landscape Architect. Proper interception and disposal of on-site surface discharge is presumed to be a matter of civil engineering or landscape architectural design.

2. Drainage and Drainage Devices

The performance of the planned foundation and improvements is dependent upon maintaining adequate surface drainage both during and after construction. The ground surface around foundations and improvements should be graded so that surface water will not collect and pond. The impact of heavy irrigation can artificially create perched water conditions. This may result in seepage or shallow groundwater conditions where previously none existed.

Attention to surface drainage and controlled irrigation will significantly reduce the potential for future problems related to water infiltration. Irrigation should be well controlled and minimized. Seasonal adjustments should be made to prevent excessive watering.

Sources of uncontrolled water, such as leaky water pipes or drains, should be repaired if identified.

The Owner should be aware of the potential problems that could develop when drainage is altered through construction of retaining walls, paved walkways, utility installations or other various improvements. Ponded water, incorrect drainage, leaky irrigation systems, overwatering or other conditions that could lead to unwanted groundwater infiltration must be avoided.

Area drains should be installed in all planter and landscape areas. Planter surfaces should be sloped away from building areas in accordance with Code requirements. Roof

drainage should be tight-lined into the area drain system or carried to outlets away from building foundations. Planters should not be allowed adjacent to foundations unless they are lined with a bottom barrier installed with a minimum 5 percent gradient away from foundations.

Irrigation water should be controlled for the landscape areas in a way that maintains uniform moisture conditions around and below the building slab and footings. Changes in exterior moisture will promote heave and desiccation in the soil supporting foundations and must, therefore, be avoided. Installation of concrete patios and walkways adjacent to the building is recommended due to the potentially expansive on-site soil conditions.

3. Infiltration

Concentrated water infiltration into the on-site near surface soils is not practical or advisable due to possible low permeability rates in the fine-grained, diatomaceous soils encountered during our field investigation. BMPs for water quality requirements should be designed by the Civil Engineer. Filtration of water will be required prior to outlet into the storm drain. Surface and subsurface drainage should be directed toward approved outlets.

Foundation Plan Review

The undersigned should review final foundation plans and specifications prior to their submission to the Building Official for issuance of permits. The review is to be performed only for the limited purpose of checking for conformance with design concepts and the information provided herein. Review shall not include evaluation of the accuracy or completeness of details, such as quantities, dimensions, weights or gauges, fabrication processes, construction means or methods, coordination of the work with other trades or construction safety precautions, all of which are the sole responsibility of the Contractor. The R McCarthy Consulting, Inc. (RMC) review shall be conducted with reasonable promptness while allowing sufficient time in our judgment to permit adequate review. Review of a specific item shall not indicate that RMC has reviewed the entire system of which the item is a component. RMC shall not be responsible for any deviation from the Contract Documents not brought to our attention in writing by the Contractor. RMC shall not be required to review partial submissions or those for which submissions of correlated items have not been received.

Utility Trench Backfill

Utility trench backfill should be placed in accordance with Appendix D, Standard Grading Guidelines. It is the Owner's and Contractor's responsibility to inform Subcontractors of these requirements and to notify R McCarthy Consulting, Inc. when backfill placement is to begin. It has been our experience that trench backfill requirements are rigorously enforced by the local agencies.

The on-site soils are suitable for use as trench backfill. On-site soils may be difficult to mix and compact to a uniform condition. The use of imported backfill is sometimes more efficient as an option. Fill materials should be placed at near optimum moisture content and compacted under the observation and testing of the Soil Engineer. The minimum dry density required for compacted backfill material is 90 percent of the maximum dry density as determined by ASTM D1557.

If utility contractors indicate that it is undesirable to use compaction equipment in close proximity to a buried conduit, we recommend the utilization of lightweight mechanical equipment and/or shading of the conduit with clean granular material, which could be thoroughly jetted in place above the conduit prior to initiating mechanical compaction procedures. Bedding materials should have a sand equivalent not less than 30. Other methods of utility trench compaction may also be appropriate as approved by the Geotechnical Engineer at the time of construction.

The walls of temporary construction trenches are expected to be stable when cut into fill soils, with only minor sloughing, provided the total depth does not exceed about 4 feet. Shoring of excavation walls or flattening of slopes may be required, if greater depths are necessary. All work associated with trench shoring must conform to the State of California Safety Code. The depth of the site utilities is unknown at this time. Excavation exceeding 5 feet below site grades should be reviewed by the Geotechnical Consultant to provide recommendations prior to digging.

Trenches should be located so as not to impair the bearing capacity or cause settlement under foundations. As a guide, trenches subparallel to foundations should be clear of a 45-degree plane extending outward and downward from the edge of the foundations.

Pre-Grade Meeting

A pre-job conference should be held with a representative of the Owner, Contractor, Architect, Civil Engineer, Geotechnical Engineer, and Building Official prior to commencement of construction to clarify any questions relating to the intent of these recommendations or additional recommendations.

OBSERVATION AND TESTING

General

Geotechnical observation and testing during construction is required to verify proper removal of unsuitable materials, check that foundation excavations are clean and founded in competent material, to test for proper moisture content and proper degree of compaction of fill, to test and observe placement of wall and trench backfill materials, and to confirm design assumptions. It

REVIEW IS SUBJECT
TO THE LIMITATIONS
STATED IN THE REPORT DATED
5-5-2022, FILE NO: 8677-10
REPORT NO: R1-8677
R MCCARTHY CONSULTING, INC.

REGISTERED PROFESSIONAL ENGINEER
ROBERT J. MCCARTHY
No. 2490
Exp. 3/31/26
GEOTECHNICAL
STATE OF CALIFORNIA

Signed 1/03/2024

IDEALIZED PROFILE

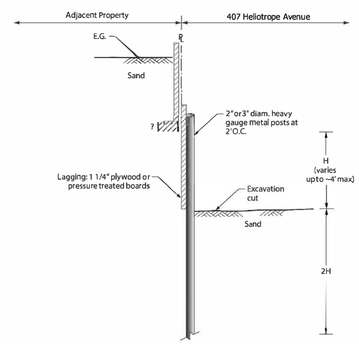

Notes:
1. Geotechnical consultant should observe all excavations and verify shoring installation.
2. See report text for additional details.

Figure 1: Temporary Shoring Detail
407 Heliotrope Avenue
Corona del Mar, CA
File: 8677-00 May 2023

R McCARTHY CONSULTING, INC.

PREPARED FOR:

JRC REAL ESTATE DEVLOPMENT
14930 ALONDRA BLVD.
LA MIRADA, CA 90638
TEL: (562) 623-9328

REVISIONS	BY	DATE	APVD.	DATE

HELIOTROPE DUPLEX

SOILS REPORT RECOMMENDATIONS

POR. LOTS 7 & 9, BLOCK 334, CORONA DEL MAR
407 HELIOTROPE AVENUE, CORONA DEL MAR, CALIFORNIA

DATE: 12/22/2023	H. SCALE: N/A
SURVEY DATE: N/A	V. SCALE: N/A
DRN.: B.J.F.	DWG. NO. C-5
CHD.: M.F.B.	
APPD.: M.F.B.	
JOB NO. 23032	SHEET 5 OF 5

12/22/2023 4:02:24 PM N:\23xx\23032 Lufkens 407 Heliotrope\Drawings\Civil\23032-qp-05.dwg

Housing Crisis Act Compliance for Demolitions

Community Development Department
Planning Division
100 Civic Center Drive / P.O. Box 1768 / Newport Beach, CA 92658-8915
(949) 644-3204 Telephone / (949) 644-3229 Facsimile
www.newportbeachca.gov

General Information

The Housing Crisis Act of 2019 (SB 330 [Chapter 654, Statutes of 2019] and SB 8 [Chapter 161, Statues of 2021]) sets a temporary 10-year prohibition on reducing residential density when associated with the approval of a "housing development project", beginning January 1, 2020 and concluding on January 1, 2030. A "housing development project" is defined as: a residential project of one or more units; a mixed-use project with two-thirds of the floor area designated for residential use; or a transitional or supportive housing project. In addition, existing units that are defined as "protected"[1] under the law (see below for qualifications) must be replaced with units that have an equivalent number of bedrooms, rents affordable at the same income category as the displaced tenant(s) (or if incomes are unknown, according to the proportion of lower income renter households in the jurisdiction), and displaced tenants must be provided relocation benefits. Therefore, concurrent with the application of a housing development project that involves the demolition of any residential unit(s), the property owner shall answer the questions below for Housing Crisis Act compliance.

Site Address: 407 Heliotrope **Legal Description:** APN 459-172-14

1) **Are you proposing to redevelop the site with a "housing development project"?** ☑ Yes ☐ No

   If no, stop here and sign certification.

2) **Units proposed for demolition:** 2 **Units proposed for construction:** 2

   If a reduction in density is proposed, a demolition permit cannot be issued.

3) **If you answer yes to any of the following questions, the unit(s) are considered "protected":**

   a. Currently, or within the last 5 years, are any of the units subject to a recorded covenant ordinance, or law restricting rents to levels affordable to low- or very low-income households? ☐ Yes ☑ No

   b. Currently, or within the last 5 years, are any of the units occupied by low- or very-low income households (see attachment for current income limits)? ☐ Yes ☑ No

   If any of the units proposed for demolition meet the "protected" criteria, please provide a summary of units (i.e., apartment number, size, number of bedrooms, household size, and income level of tenant) and schedule a meeting with a planner to discuss replacement requirements. A demolition permit cannot be issued until an agreement is executed with the City guaranteeing the replacement of the protected units and tenant relocation benefits.

Property Owner Certification (required):

I Chris Hyun, hereby certify that I am the property owner of the above described property. I declare under the penalty of perjury, the facts, statements and information presented in this document are true and correct to the best of my knowledge and belief.

Signature — 05 May 2023 (Date) — 562.623.9328 (Phone Number)

[1] The City of Newport Beach does not have a local rent control ordinance. As such, the categories of "protected units" are limited to those stated above.

Updated 1/2022

CITY OF NEWPORT BEACH

COMMUNITY DEVELOPMENT DEPARTMENT
BUILDING DIVISION
100 Civic Center Drive | P.O. Box 1768 | Newport Beach, CA 92658-8915
www.newportbeachca.gov | (949) 644-3200

ACKNOWLEDGMENT OF NO CONSTRUCTION-RELATED NOISE ON SATURDAY OR SUNDAY IN HIGH DENSITY AREAS

On June 11, 2019, the City Council adopted an ordinance restricting construction-related noise on Saturday in High Density Areas effective August 12, 2019.

I acknowledge that any construction-related noise, (including, but not limited to operating power equipment or machinery in a manner that produces noise) is not allowed on Saturday or Sunday in High Density Areas in accordance with Newport Beach Municipal Code 10.28.040. As the owner of the property, I am responsible to ensure all persons working on the property comply with this provision of the Newport Beach Municipal Code.

Project Address: 407 Heliotrope Avenue, Corona Del Mar, CA 92625

Permit Number: PC2023-1312

Owner's Name: Chris Hyun

Owner's Signature:

Contractor's Signature:

Date: 16 October 2023

FormsAcknowledgment_No_Saturday_Construction_HighDensityAreas

high density area acknowledgement 1

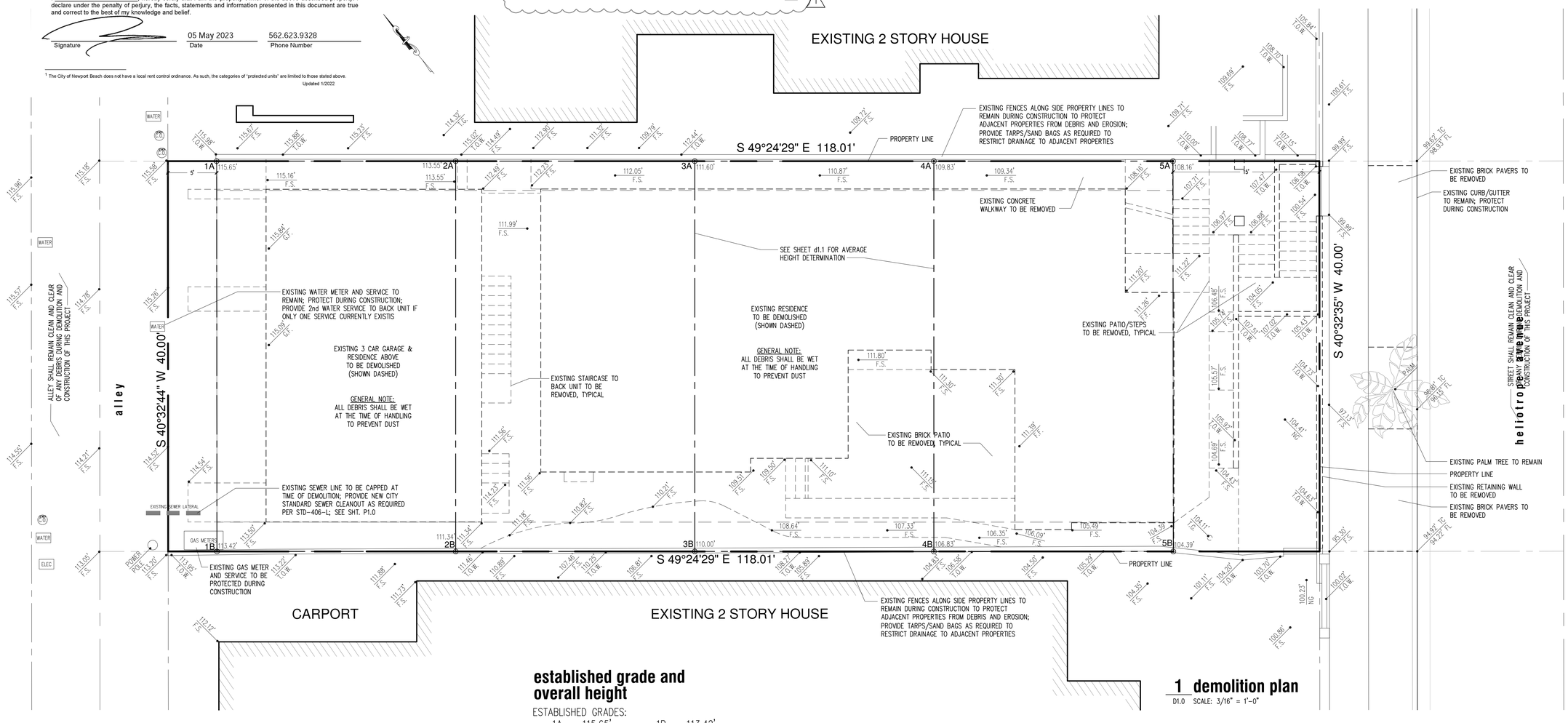

established grade and overall height

ESTABLISHED GRADES:

1A	115.65'	1B	113.42'
2A	113.55'	2B	111.34'
3A	111.60'	3B	110.00'
4A	109.83'	4B	106.83'
5A	108.16'	5B	104.39'

GENERAL NOTE:
RECYCLE AND/OR SALVAGE FOR REUSE A MINIMUM OF 65% OF THE NONHAZARDOUS CONSTRUCTION AND DEMOLITION WASTE IN ACCORDANCE WITH SECTION 4.408.1 CALGREEN CODE

1 demolition plan
D1.0 SCALE: 3/16" = 1'-0"

wall legend

EXISTING 1 STORY, SINGLE FAMILY RESIDENCE TO BE DEMOLISHED

EXISTING ADJACENT STRUCTURE TO REMAIN

d1.0

demolition plan
3/16"=1'-0"

heliotrope duplex

407 heliotrope avenue
corona del mar, california
92625

1 CITY CORRECTIONS 16 OCTOBER 2023

LICENSED ARCHITECT — ERIC D. AUST — C-29374 — 31 MAY 2025 RENEWAL DATE — STATE OF CALIFORNIA

0 1' 2' 4' 8'

true north / ref. north

22 may 2023

© copyright 2023

job #2117

eric aust architect
62 balboa coves
newport beach, california 92663
tel 949.637.5220

client:
JRC real estate development
14930 alondra blvd.
la mirada, california 90638
tel 562.623.9328

d1.1

roof overlay plan (height verification)
3/16"=1'-0"

heliotrope duplex

407 heliotrope avenue
corona del mar, california
92625

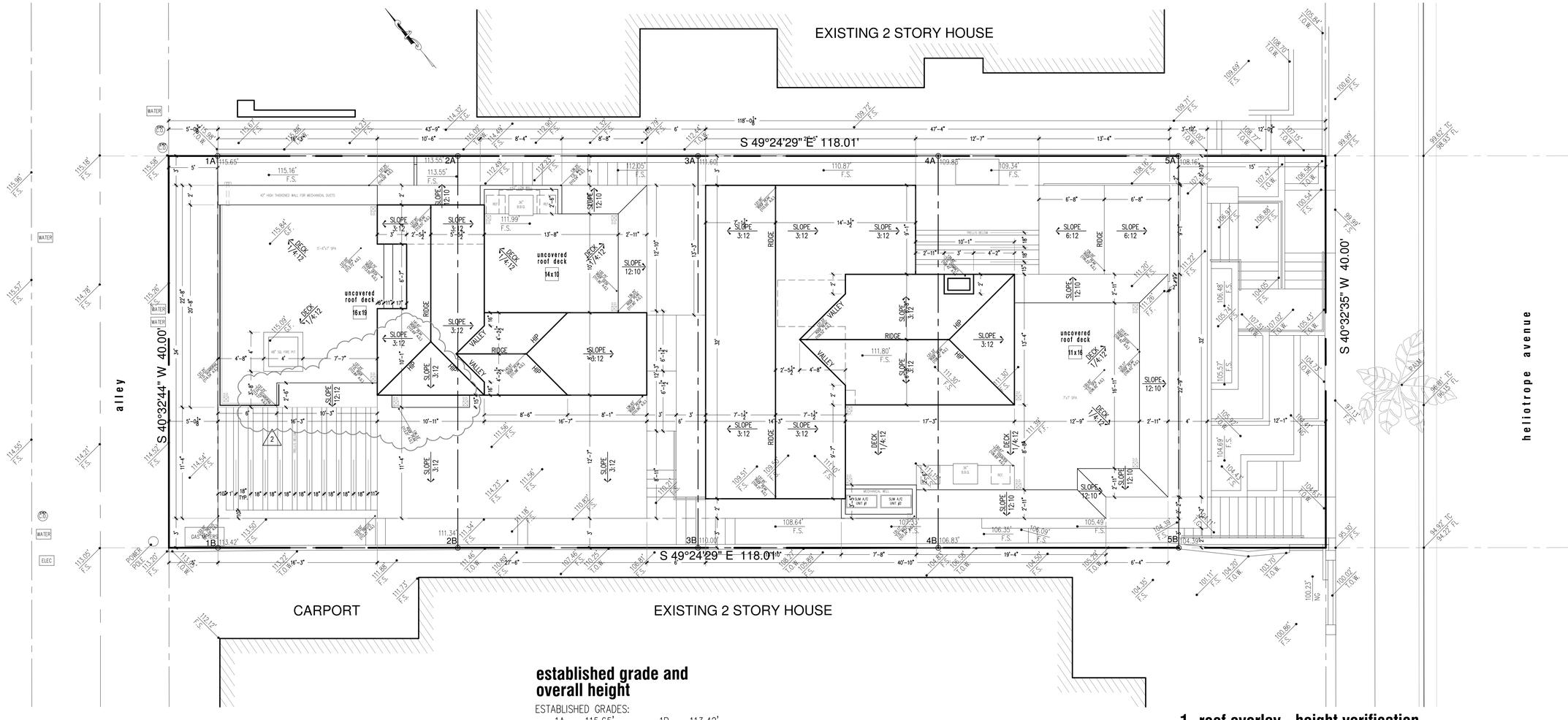

established grade and overall height

ESTABLISHED GRADES:

1A	115.65'	1B	113.42'
2A	113.55'	2B	111.34'
3A	111.60'	3B	110.00'
4A	109.83'	4B	106.83'
5A	108.16'	5B	104.39'

1 roof overlay - height verification
D1.0 SCALE: 3/16" = 1'-0"

2 CITY CORRECTIONS 16 NOVEMBER 2023

LICENSED ARCHITECT
ERIC D. AUST
C-29374
31 MAY 2025
RENEWAL DATE
STATE OF CALIFORNIA

0 1' 2' 4' 8'

true north / ref. north

22 may 2023
© copyright 2023
job #2117

eric aust architect
62 balboa coves
newport beach, california 92663
tel 949.637.5220

client:
JRC real estate development
14930 alondra blvd.
la mirada, california 90638
tel 562.623.9328

drawing notes

1. SOLID 8" WIDE OAK PLANK HARDWOOD FLOORING WITH OIL FINISH (LOW V.O.C. FINISH); PROVIDE 6" PAINT GRADE WOOD BASE THROUGHOUT (37/A6.1); PAINT GLOSS WHITE
2. STONE/TILE FLOORING; OWNER TO SELECT TILE
3. STAIN GRADE CABINETS; OWNER TO SELECT EXACT STYLE, COLOR AND FINISH
4. PAINTED WOOD BENCH AT MILLWORK; PROVIDE CUSTOM CUSHIONS WITH FABRIC SELECTED BY OWNER
5. SLAB COUNTERTOP; OWNER TO SELECT SLAB AND EDGE PROFILE
6. PLUMBING FIXTURE; REFERENCE SHEET P1.0 FOR PLUMBING FIXTURE SCHEDULE
7. PROVIDE 5/8" TYPE-X GYP. BD. AT CEILING AND WALLS AT STORAGE AREA BELOW STAIRCASE, TYPICAL
8. SOLID HARDWOOD STAIR TREADS WITH STAINED FINISH (LOW V.O.C. FINISH) TO MATCH FLOORS; REF. DETAIL 28/A6.1
9. HANDRAIL AT STAIRCASE AT +36" ABOVE STAIR TREAD; SEE DETAIL 49/A6.2
10. TOWEL BAR; PROVIDE BLOCKING
11. TOILET PAPER HOLDER; PROVIDE BLOCKING
12. CLOSET ORGANIZING SYSTEM TO BE SELECTED
13. 5/8" TYPE-X GYP. BD. AT WALLS AND CEILING OF GARAGE; EPOXY FINISH AT CONCRETE SLAB
14. SLAB BENCH AT SHOWER OVER HOT MOPPED FRAMING; SLOPE TOWARDS FRONT EDGE OF BENCH FOR DRAINAGE
15. GUTTER DOWNSPOUT; REFERENCE GRADING & DRAINAGE PLAN
16. DOOR THRESHOLD AT EXTERIOR DOORS TO BE MAX. OF ½"
17. EXISTING STREET/ALLEY TO REMAIN; PROTECT DURING CONSTRUCTION
18. EQUIPMENT; REFERENCE SHEET P1.0 FOR EQUIPMENT SCHEDULE
19. FULL HEIGHT WALLS WITH TILE OVER 1/2" CEMENT BACKER BOARD AT ALL SHOWER WALLS (FULL HEIGHT); PROVIDE TILED RECESS PER PLAN FOR SHAMPOO STORAGE WITHIN SHOWER; PROVIDE HOT MOP AT PAN, BENCH & UP WALLS +18"
20. FIRE SPRINKLER RISER; DESIGN BY OTHERS UNDER SEPARATE PERMIT
21. 1/2" THK. FRAMELESS, TEMP. 'STARPHIRE' GLASS SHOWER DOORS
22. CONCRETE SLAB ON GRADE PATIO WITH LIGHT ACID FINISH; SLOPE TOWARDS AWAY FROM STRUCTURE PER GRADING & DRAINAGE PLAN
23. LANDSCAPE AREA, REFERENCE LANDSCAPE DRAWINGS
24. CONTINUOUS STEEL 42" HIGH GUARDRAIL/36" HIGH HANDRAIL (AT STAIRCASE); REF. DETAIL 35/A6.1; CONSTRUCT TO RESIST 200# HORIZ. LOAD AT TOP OF RAIL
25. HEAT-N-GLO "MEZZO60" INDOOR, DIRECT VENT GAS FIREPLACE WITH FIRESCREEN FRONT; VENT THROUGH WALL TO SIDE WALL TERMINATION CAP; U.L. #127; LISTED DIRECT VENT GAS APPLIANCE FIREPLACE; CUSTOM, FULL HEIGHT NATURAL STONE SURROUND; SEE SHT. P1.0
26. ISOKERN VENT-FREE 36" EXTERIOR FIREPLACE (ESR-2316 REPORT) WITH 30" RASMUSSEN C1 SINGLE BURNER SERIES VENT-FREE GAS LOG SET (ANSI Z21.60) SECURED TO BASE OF FIREPLACE; CUSTOM, STUCCO SURROUND
27. EXISTING 6' HIGH FENCE TO REMAIN; PROVIDE NEW STUCCO FINISH AT INSIDE FACE TO MATCH HOUSE FINISH
28. PROVIDE ⅝" GYP. BD. AND FULL THK. SOUND BATTS AT ALL INTERIOR WALL AND CEILING FRAMING, TYP. THROUGHOUT
29. 42" HIGH GLASS GUARDRAIL, 9/16" THK., LAMINATED FRAMELESS GLASS GUARDRAIL WITH STAINLESS STEEL SHOE; REFERENCE DETAIL 30/A6.1 (ESR-3842)
30. OUTDOOR SHOWER; INSTALL WITH COLD WATER ONLY
31. 5/8" TYPE-X GYP. BD. O/ RESILIENT CHANNELS AT 16" O.C. ON ONE SIDE OF WALL AND 5/ 8" TYPE-X GYP. BD. ON OTHER (1-HOUR)
32. AT UNIT 'A' POWDER AND UNIT 'B' BATH #3B, PROVIDE 2x6 MIN. REINFORCEMENT BLOCKING AT +32" AROUND ALL WALL FRAMING FOR FUTURE GRAB BARS AND OTHER HANDICAP ACCESSIBILITY; SEE ELEVATION A+B/A3.0

SOUND INSULATION GENERAL NOTES:
(APPLICABLE TO ALL FLOORS, WALLS + CEILINGS FOR THIS PROJECT)
1. APPROVED ACOUSTICAL SEALANT SHALL BE PROVIDED ALONG THE JOINT BETWEEN THE FLOOR AND THE SEPARATION WALL.
2. ALL PENETRATIONS INTO SOUND-RATED PARTITIONS OF FLOOR-CEILING ASSEMBLIES SHALL BE SEALED WITH APPROVED PERMANENT RESILIENT SEALANT.
3. ALL RIGIT CONDUIT, DUCTS, PLUMBING PIPES AND APPLIANCE VENTS LOCATED IN THE SOUND ASSEMBLIES SHALL BE ISOLATED FROM THE BUILDING CONSTRUCTION BY MEANS OF RESILIENT SLEEVES, MOUNTS OR MINIMUM 1/4" THICK APPROVED RESILIENT MATERIAL. (*EXCEPTION: GAS PIPING NEED NOT BE ISOLATED)
4. METAL VENTILATING AND CONDITIONED AIR DUCTS LOCATED IN SOUND ASSEMBLIES SHALL BE LINED.
5. MINERAL FIBER INSULATION SHALL BE INSTALLED IN JOIST SPACES TO A POINT 12" BEYOND THE PIPE OR DUCT, WHENEVER A PLUMBING PIPE OR DUCTS PENETRATES A FLOOR-CEILING ASSEMBLY OR WHERE SUCH UNIT PASSES THROUGH THE PLANE OF THE FLOOR-CEILING ASSEMBLY WITHIN A WALL.

project area analysis

4,720 s.f. lot area

3,332 s.f. buildable lot area

1.5 x 3,332=4,998 s.f. allowable

project area analysis

1,331 s.f. 1st floor - UNIT 'A' (livable)
395 s.f. 1st floor - UNIT 'B' (livable)
1,120 s.f. 2nd floor - UNIT 'A' (livable)
1,258 s.f. 2nd floor - UNIT 'B' (livable)
290 s.f. 3rd floor - UNIT 'A' (livable)
+ 84 s.f. 3rd floor - UNIT 'B' (livable)

4,478 s.f. total livable
(2,741 S.F. - UNIT 'A')
(1,737 S.F. - UNIT 'B')

249 s.f. garage - UNIT 'A'
230 s.f. garage - UNIT 'B'

4,957 s.f. total floor area

wall legend

2x4 FRAMING AT 16" o.c. W/ R-15 BATT INSULATION THROUGHOUT; 5/8" GYP. BD.

2x6 FRAMING AT 16" o.c. W/ R-21 BATT INSULATION THROUGHOUT; 5/8" GYP. BD.

1 HOUR RATED INTERIOR PARTITION: 5/8" TYPE-X GYP. BD. AT BOTH SIDES, TYP.; 1-HOUR ASSEMBLY SHALL EXTEND FROM FOUNDATION TO THE UNDERSIDE OF THE ROOF SHEATHING, TYP.

DUAL GLAZED WINDOWS, TYP. THROUGHOUT; REFERENCE WINDOW SCHEDULE, SHEET A5.1

DOOR; REFERENCE DOOR SCHEDULE, SHEET A5.0

a1.0

1st floor plan
1/4"=1'-0"

heliotrope duplex

407 heliotrope avenue
corona del mar, california
92625

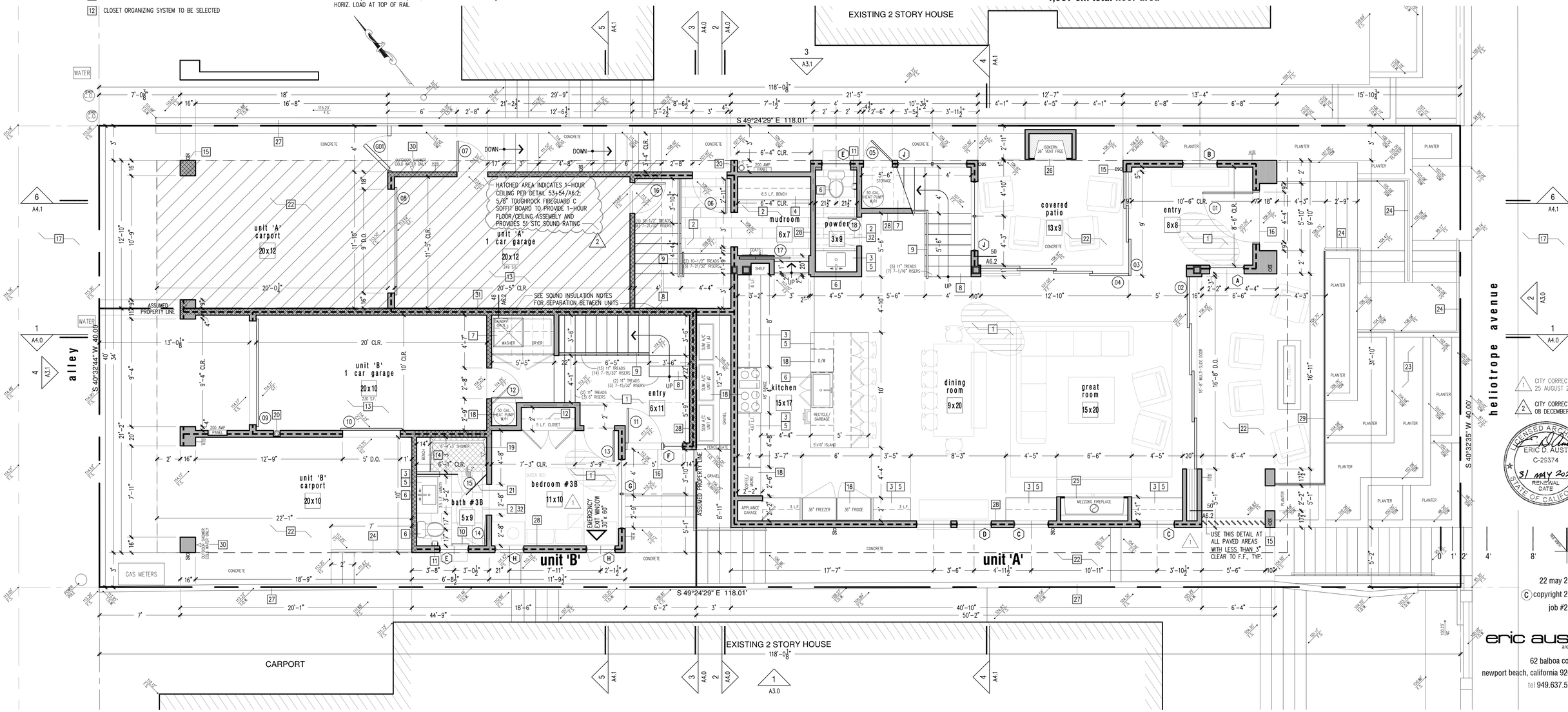

1 1st floor plan

A1.0 SCALE: 1/4" = 1'-0"

1 A4.0 — CITY CORRECTIONS 25 AUGUST 2023
2 A3.0 — CITY CORRECTIONS 08 DECEMBER 2023

LICENSED ARCHITECT
ERIC D. AUST
C-29374
31 MAY 2025
RENEWAL DATE
STATE OF CALIFORNIA

0 1' 2' 4' 8'

north

22 may 2023
© copyright 2023
job #2117

eric aust architect
62 balboa coves
newport beach, california 92663
tel 949.637.5220

client:
JRC real estate development
14930 alondra blvd.
la mirada, california 90638
tel 562.623.9328

drawing notes

1. SOLID 8" WIDE OAK PLANK HARDWOOD FLOORING WITH OIL FINISH (LOW V.O.C. FINISH); PROVIDE 6" PAINT GRADE WOOD BASE THROUGHOUT (37/A6.1); PAINT GLOSS WHITE
2. STONE/TILE FLOORING; OWNER TO SELECT TILE
3. STAIN GRADE CABINETS; OWNER TO SELECT EXACT STYLE, COLOR AND FINISH
4. PROVIDE ⅝" GYP. BD. AND FULL THK. SOUND BATTS AT ALL INTERIOR WALL AND CEILING FRAMING, TYP. THROUGHOUT
5. SLAB COUNTERTOP; OWNER TO SELECT SLAB AND EDGE PROFILE
6. PLUMBING FIXTURE; REFERENCE SHEET P1.0 FOR PLUMBING FIXTURE SCHEDULE
7. PROVIDE 5/8" TYPE-X GYP. BD. AT CEILING AND WALLS AT STORAGE AREA BELOW STAIRCASE, TYPICAL
8. SOLID HARDWOOD STAIR TREADS WITH STAINED FINISH (LOW V.O.C. FINISH) TO MATCH FLOORS; REF. DETAIL 28/A6.1
9. HANDRAIL AT STAIRCASE AT +36" ABOVE STAIR TREAD; 42" AT GUARDRAIL (AT OPEN SIDE OF STAIR LANDING) SEE DETAIL 49/A6.2
10. TOWEL BAR; PROVIDE BLOCKING
11. TOILET PAPER HOLDER; PROVIDE BLOCKING
12. CLOSET ORGANIZING SYSTEM TO BE SELECTED
13. SOLID HARDWOOD FLOATING STAIR TREADS WITH STAINED FINISH (LOW V.O.C. FINISH) TO MATCH FLOORS; REF. DETAIL 31/A6.1
14. GLASS GUARDRAIL WITH HANDRAIL AT STAIRCASE AT +36" ABOVE STAIR TREAD; SEE DETAIL 35/A6.1
15. SLAB BENCH AT SHOWER OVER HOT MOPPED FRAMING; SLOPE TOWARDS FRONT EDGE OF BENCH FOR DRAINAGE
16. 42" HIGH GLASS GUARDRAIL, 9/16" THK., LAMINATED FRAMELESS GLASS GUARDRAIL WITH STAINLESS STEEL SHOE; REFERENCE DETAIL 33+37/A6.1 (ESR-3842)
17. TILE FINISH OVER DEX-O-TEX DECK COATING SYSTEM (ESR-1757) OR SIMILAR WATERPROOF DECK MEMBRANE SYSTEM; SLOPE TOWARDS DECK DRAINS OR EDGE; DECK SHEATHING SHALL ULTIMATELY BE SLOPED AT 1/4":1'-0" TOWARDS INTERNAL DECK DRAINS OR EDGE; PROVIDE ICYNENE CLOSED CELL INSULATION, TYP. AT ALL ROOF DECKS; PROVIDE R-38 MIN. AT ALL DECK AREAS
18. EQUIPMENT; REFERENCE SHEET P1.0 FOR EQUIPMENT SCHEDULE
19. FULL HEIGHT WALLS WITH TILE OVER 1/2" CEMENT BACKER BOARD AT ALL SHOWER WALLS (FULL HEIGHT); PROVIDE TILED RECESS PER PLAN FOR SHAMPOO STORAGE WITHIN SHOWER; PROVIDE HOT MOP AT PAN, BENCH & UP WALLS +18"
20. 1/2" THK. FRAMELESS, TEMP. 'STARPHIRE' GLASS SHOWER DOORS
21. HEAT-N-GLO "MEZZO60" INDOOR, DIRECT VENT GAS FIREPLACE WITH FIRESCREEN FRONT; VENT THROUGH WALL TO SIDE WALL TERMINATION CAP; U.L. #127; LISTED DIRECT VENT GAS APPLIANCE FIREPLACE; CUSTOM, FULL HEIGHT NATURAL STONE SURROUND; SEE SHT. P1.0
22. 6x10 AT 18" O.C. WOOD TRELLIS (BELOW)
23. ROOF AREA BELOW
24. ANGLED WOOD SCREEN WALL; REF. DETAIL 15/A6.0
25. ROOF DRAIN/OVERFLOW PER DETAIL 26/A6.1
26. ROOF SCUPPER AT WALL PER DETAIL 27/A6.1

wall legend

2x4 FRAMING AT 16" o.c. W/ R-15 BATT INSULATION THROUGHOUT; 5/8" GYP. BD.

2x6 FRAMING AT 16" o.c. W/ R-21 BATT INSULATION THROUGHOUT; 5/8" GYP. BD.

1 HOUR RATED INTERIOR PARTITION: 5/8" TYPE-X GYP. BD. AT BOTH SIDES, TYP.; 1-HOUR ASSEMBLY SHALL EXTEND FROM FOUNDATION TO THE UNDERSIDE OF THE ROOF SHEATHING, TYP.

DUAL GLAZED WINDOWS, TYP. THROUGHOUT; REFERENCE WINDOW SCHEDULE, SHEET A5.1

DOOR; REFERENCE DOOR SCHEDULE, SHEET A5.0

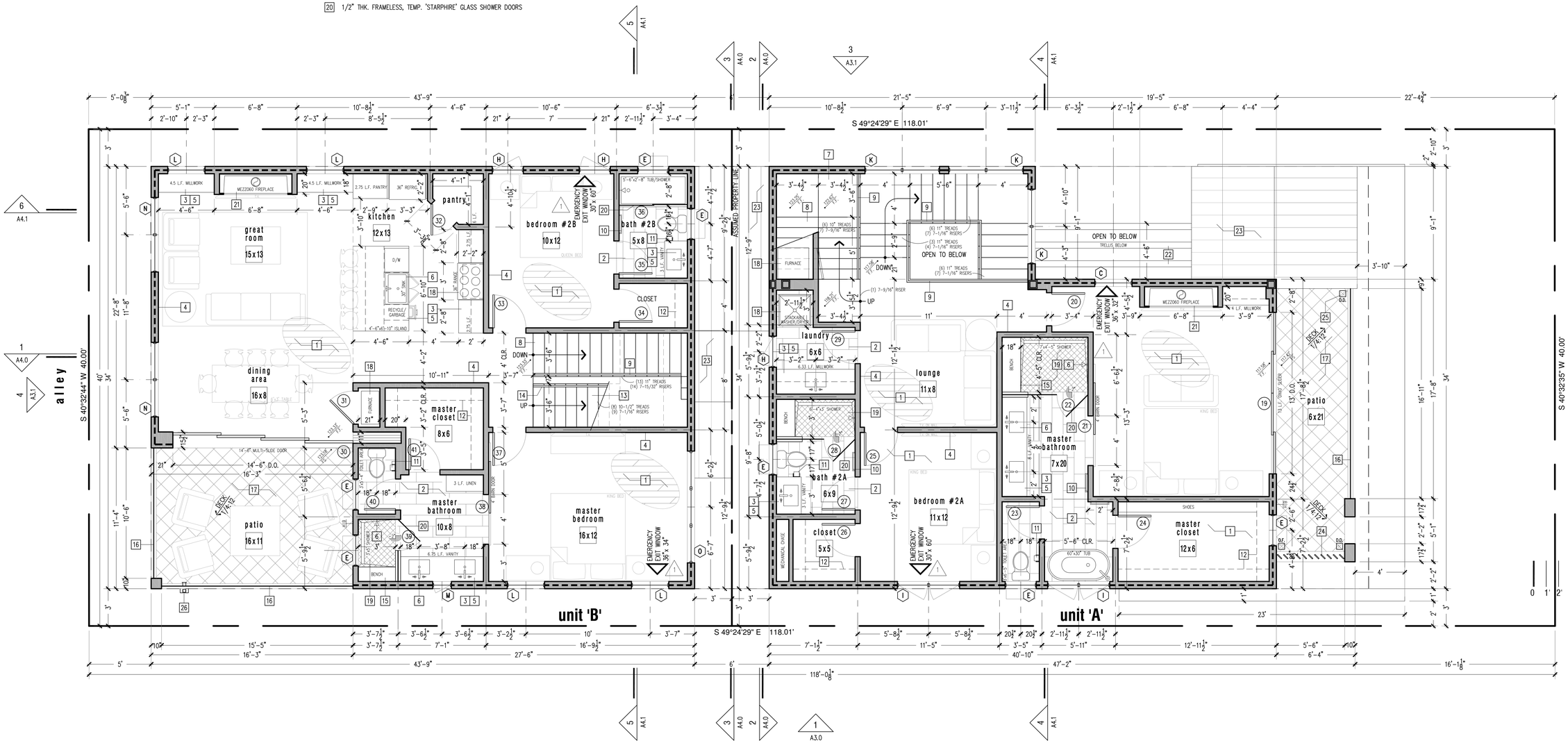

2 2nd floor plan

A1.1 SCALE: 1/4" = 1'-0"

a1.1

2nd floor plan
1/4"=1'-0"

heliotrope duplex

407 heliotrope avenue
corona del mar, california
92625

heliotrope avenue

1 CITY CORRECTIONS 16 OCTOBER 2023

2 CITY CORRECTIONS 08 DECEMBER 2023

LICENSED ARCHITECT
ERIC B. AUST
C-29374
31 MAY 2025
RENEWAL DATE
STATE OF CALIFORNIA

0 1' 2' 4' 8' north

22 may 2023
© copyright 2023
job #2117

eric aust architect
62 balboa coves
newport beach, california 92663
tel 949.637.5220

client:
JRC real estate development
14930 alondra blvd.
la mirada, california 90638
tel 562.623.9328

drawing notes

1. SOLID 8" WIDE OAK PLANK HARDWOOD FLOORING WITH OIL FINISH (LOW V.O.C. FINISH); PROVIDE 6" PAINT GRADE WOOD BASE THROUGHOUT (37/A6.1); PAINT GLOSS WHITE
2. STONE/TILE FLOORING; OWNER TO SELECT TILE
3. STAIN GRADE CABINETS; OWNER TO SELECT EXACT STYLE, COLOR AND FINISH
4. PROVIDE 5/8" GYP. BD. AND FULL THK. SOUND BATTS AT ALL INTERIOR WALL AND CEILING FRAMING, TYP. THROUGHOUT
5. SLAB COUNTERTOP; OWNER TO SELECT SLAB AND EDGE PROFILE
6. PLUMBING FIXTURE; REFERENCE SHEET P1.0 FOR PLUMBING FIXTURE SCHEDULE
7. PROVIDE 5/8" TYPE-X GYP. BD. AT CEILING AND WALLS AT STORAGE AREA BELOW STAIRCASE, TYPICAL
8. SOLID HARDWOOD STAIR TREADS WITH STAINED FINISH (LOW V.O.C. FINISH) TO MATCH FLOORS; REF. DETAIL 28/A6.1
9. HANDRAIL AT STAIRCASE AT +36" ABOVE STAIR TREAD; SEE DETAIL 49/A6.2
10. TOWEL BAR; PROVIDE BLOCKING
11. TOILET PAPER HOLDER; PROVIDE BLOCKING
12. CLOSET ORGANIZING SYSTEM TO BE SELECTED
13. SOLID HARDWOOD FLOATING STAIR TREADS WITH STAINED FINISH (LOW V.O.C. FINISH) TO MATCH FLOORS; REF. DETAIL 31/A6.1
14. GLASS GUARDRAIL WITH HANDRAIL AT STAIRCASE AT +36" ABOVE STAIR TREAD; SEE DETAIL 32/A6.1
15. 12"x12" LOUVERED WALL VENT TO PROVIDE VENTILATION AT MANSARD ROOF AREA
16. 42" HIGH GLASS GUARDRAIL, 9/16" THK., LAMINATED FRAMELESS GLASS GUARDRAIL WITH STAINLESS STEEL SHOE; REFERENCE DETAIL 37/A6.1 (ESR-3842)
17. TILE FINISH OVER DEX-O-TEX DECK COATING SYSTEM (ESR-1757) OR SIMILAR WATERPROOF DECK MEMBRANE SYSTEM; SLOPE TOWARDS DECK DRAINS OR EDGE; DECK SHEATHING SHALL ULTIMATELY BE SLOPED AT 1/4":1'-0" TOWARDS INTERNAL DECK DRAINS OR EDGE; PROVIDE ICYNENE CLOSED CELL INSULATION, TYP. AT ALL ROOF DECKS; PROVIDE R-38 MIN. AT ALL DECK AREAS
18. EQUIPMENT; REFERENCE SHEET P1.0 FOR EQUIPMENT SCHEDULE
19. FULL HEIGHT WALLS WITH TILE OVER 1/2" CEMENT BACKER BOARD AT ALL SHOWER WALLS (FULL HEIGHT); PROVIDE TILED RECESS PER PLAN FOR SHAMPOO STORAGE WITHIN SHOWER; PROVIDE HOT MOP AT PAN, BENCH & UP WALLS +18"
20. 1/2" THK. FRAMELESS, TEMP. 'STARPHIRE' GLASS SHOWER DOORS
21. 48" SQUARE BOWL GAS FIRE PIT (TO BE SELECTED BY OWNER)
22. WOOD TRELLIS (BELOW); SEE DETAIL 42/A6.1
23. ROOF AREA BELOW
24. 36"x36" FIBERGLASS ACCESS DOOR (BELOW WINDOW) TO ACCESS MECHANICAL EQUIPMENT AT MANSASRD ROOF
25. ROOF DRAIN/OVERFLOW PER DETAIL 26/A6.1
26. ROOF SCUPPER AT WALL PER DETAIL 27/A6.1
27. HEAT-N-GLO VENT-FREE 42" EXTERIOR GAS FIREPLACE WITH VENT-FREE GAS LOG SET (ANSI Z21.60) SECURED TO BASE OF FIREPLACE; CUSTOM, FULL HEIGHT NATURAL STONE SLAB SURROUND
28. 4" THICK CAST-IN-PLACE CONCRETE COUNTERTOP WITH SMOOTH, WET GRINDED FINISH; PROVIDE PAN FLASHING BELOW COUNTERTOP

wall legend

2x4 FRAMING AT 16" o.c. W/ R-15 BATT INSULATION THROUGHOUT; 5/8" GYP. BD.

2x6 FRAMING AT 16" o.c. W/ R-21 BATT INSULATION THROUGHOUT; 5/8" GYP. BD.

1 HOUR RATED INTERIOR PARTITION: 5/8" TYPE-X GYP. BD. AT BOTH SIDES, TYP.; 1-HOUR ASSEMBLY SHALL EXTEND FROM FOUNDATION TO THE UNDERSIDE OF THE ROOF SHEATHING, TYP.

DUAL GLAZED WINDOWS, TYP. THROUGHOUT; REFERENCE WINDOW SCHEDULE, SHEET A5.1

DOOR; REFERENCE DOOR SCHEDULE, SHEET A5.0

ROOF VENTILATION:
MANSARD ROOF/DECK AREA (UNIT 'B') – 55 S.F. OF ROOF AREA
7,920 S.I. / 150 = 53 S.I. REQUIRED (VENTED AT BOTTOM)
12"x12" LOUVERED WALL VENTS PROVIDE 48 S.I. FREE AREA
(2) VENTS (AT VERTICAL WALL) @ 48 S.I. EACH = 96 S.I.
TOTAL VENTILATION = 96 S.I. > 55 S.I. REQUIRED = O.K.

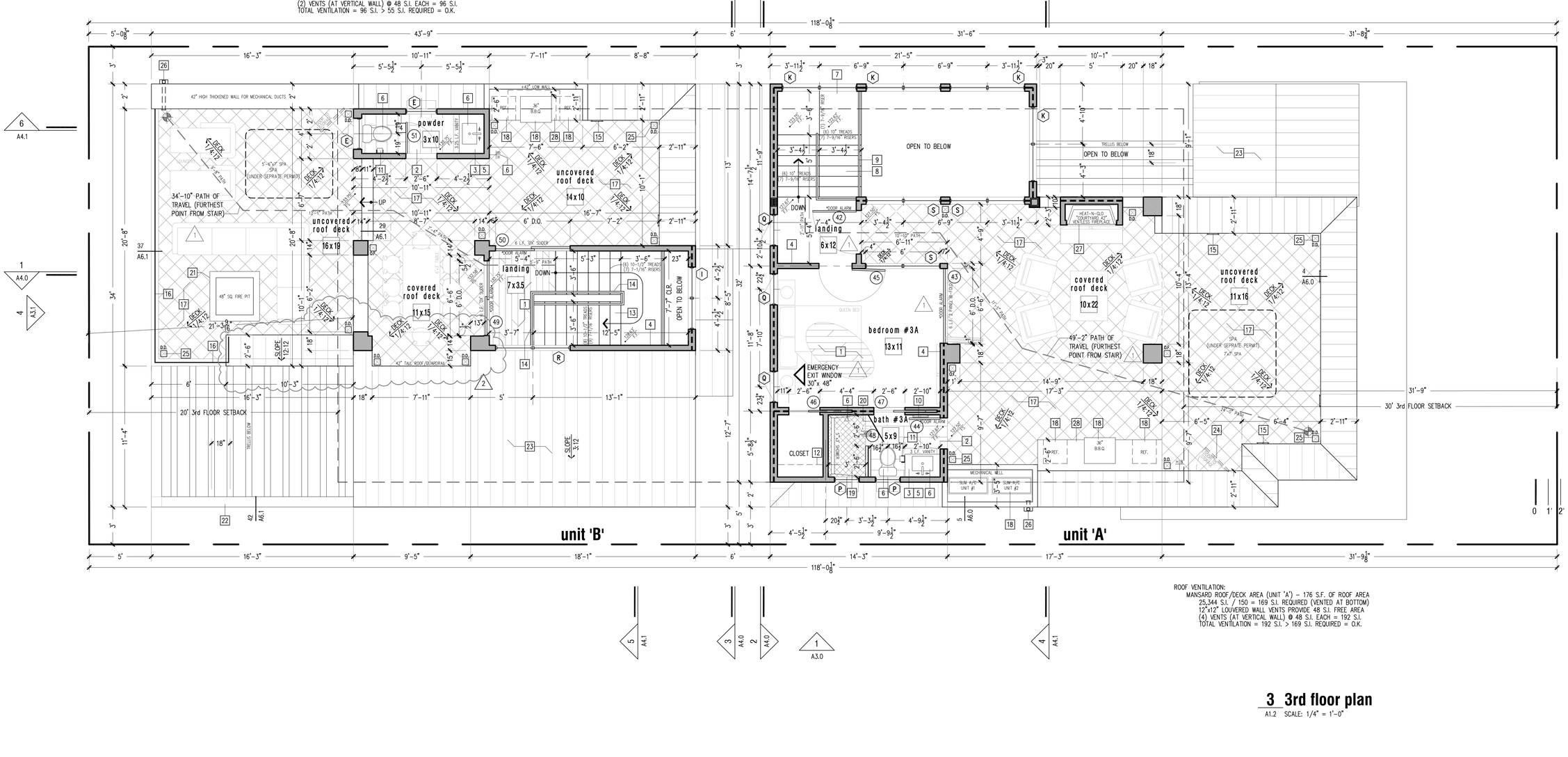

ROOF VENTILATION:
MANSARD ROOF/DECK AREA (UNIT 'A') – 176 S.F. OF ROOF AREA
25,344 S.I. / 150 = 169 S.I. REQUIRED (VENTED AT BOTTOM)
12"x12" LOUVERED WALL VENTS PROVIDE 48 S.I. FREE AREA
(4) VENTS (AT VERTICAL WALL) @ 48 S.I. EACH = 192 S.I.
TOTAL VENTILATION = 192 S.I. > 169 S.I. REQUIRED = O.K.

3 3rd floor plan
A1.2 SCALE: 1/4" = 1'-0"

a1.2

3rd floor plan
1/4"=1'-0"

heliotrope duplex

407 heliotrope avenue
corona del mar, california
92625

1 CITY CORRECTIONS 16 OCTOBER 2023
2 CITY CORRECTIONS 08 DECEMBER 2023

LICENSED ARCHITECT
ERIC D AUST
C-29374
31 MAY 2025
RENEWAL DATE
STATE OF CALIFORNIA

0 1' 2' 4' 8' north

22 may 2023
© copyright 2023
job #2117

eric aust
architect
62 balboa coves
newport beach, california 92663
tel 949.637.5220

client:
JRC real estate development
14930 alondra blvd.
la mirada, california 90638
tel 562.623.9328

a1.3

roof plan
1/4"=1'-0"

heliotrope duplex

407 heliotrope avenue
corona del mar, california
92625

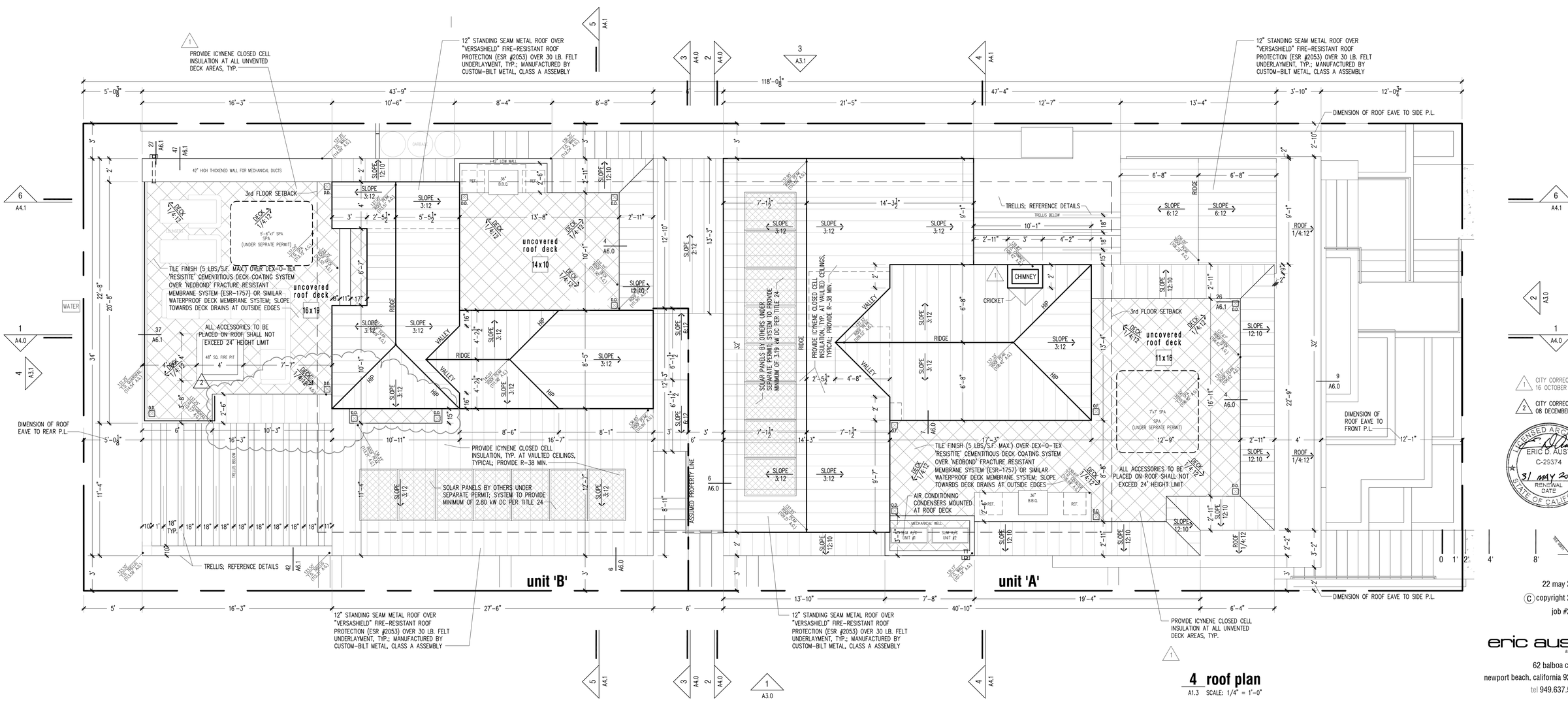

4 roof plan
A1.3 SCALE: 1/4" = 1'-0"

1 CITY CORRECTIONS 16 OCTOBER 2023
2 CITY CORRECTIONS 08 DECEMBER 2023

LICENSED ARCHITECT
ERIC D. AUST
C-29374
31 MAY 2025
RENEWAL DATE
STATE OF CALIFORNIA

north

22 may 2023
© copyright 2023
job #2117

eric aust
architect
62 balboa coves
newport beach, california 92663
tel 949.637.5220

client:
JRC real estate development
14930 alondra blvd.
la mirada, california 90638
tel 562.623.9328

a1.4

walkway/planter plan
1/4"=1'-0"

heliotrope duplex

407 heliotrope avenue
corona del mar, california
92625

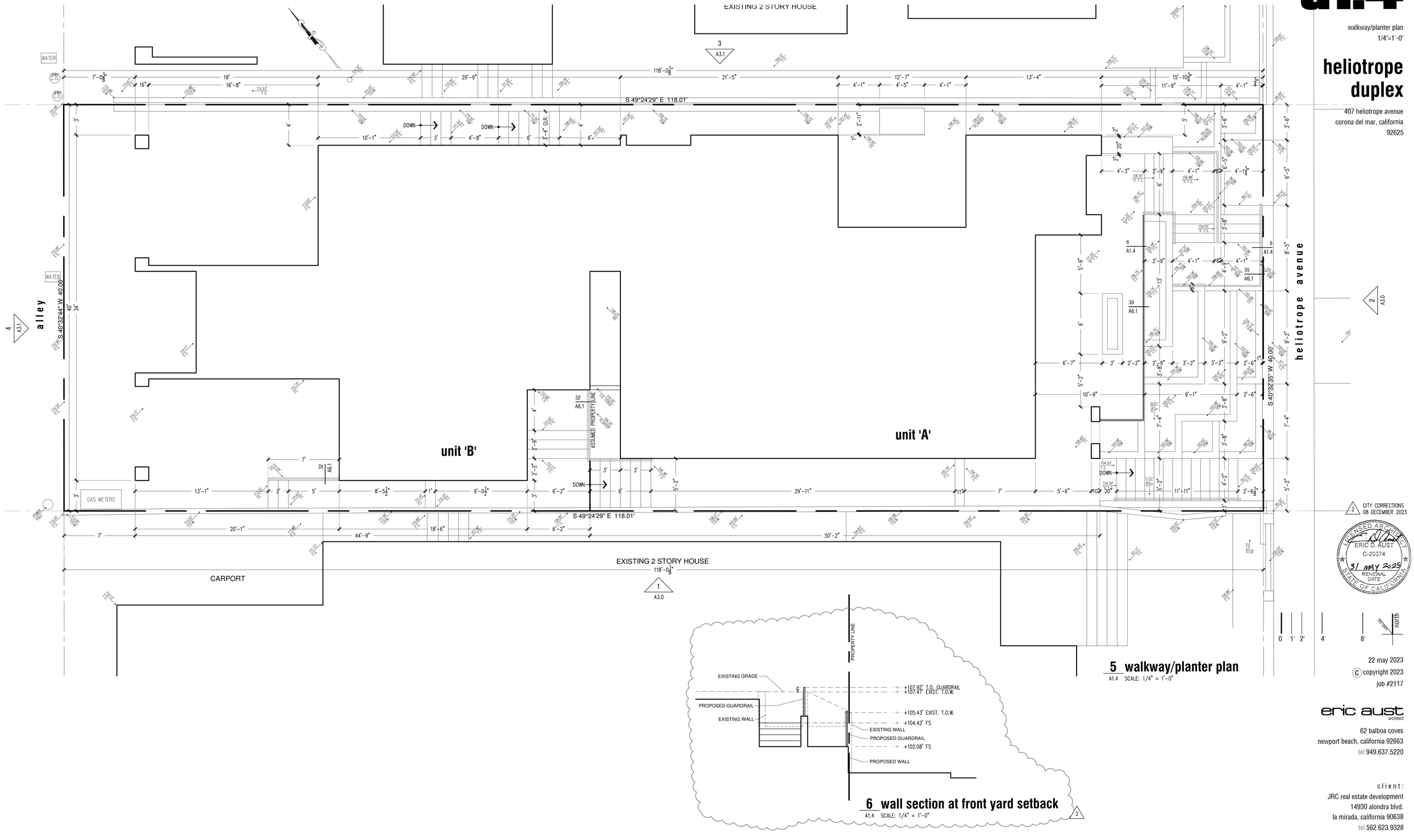

5 walkway/planter plan
A1.4 SCALE: 1/4" = 1'-0"

6 wall section at front yard setback
A1.4 SCALE: 1/4" = 1'-0"

2 CITY CORRECTIONS 08 DECEMBER 2023

LICENSED ARCHITECT
ERIC D. AUST
C-29374
31 MAY 2025
RENEWAL DATE
STATE OF CALIFORNIA

0 1' 2' 4' 8' north

22 may 2023
© copyright 2023
job #2117

eric aust architect
62 balboa coves
newport beach, california 92663
tel 949.637.5220

client:
JRC real estate development
14930 alondra blvd.
la mirada, california 90638
tel 562.623.9328

a2.0

1st + 2nd floor reflected ceiling plans
1/4"=1'-0"

heliotrope duplex

407 heliotrope avenue
corona del mar, california
92625

ceiling legend

SYMBOL	NAME
(S)	SMOKE DETECTOR (HARD WIRED W/ BATTERY BACK-UP)
(C/S)	CARBON MONOXIDE/ SMOKE COMBINATION DETECTOR (HARD WIRED W/ BATTERY BACK-UP)
○	ELEMENT 3" SQUARE L.E.D. ADJUSTABLE DOWN LIGHT FLANGELESS BEVEL 40-DEGREE FLOOD MODEL EN3S-LO-927-A-A-I/EN3S-L-B-O-W
⊕	ELEMENT 3" SQUARE L.E.D. ADJUSTABLE DOWN LIGHT FLANGELESS BEVEL 65-DEGREE WIDE FLOOD MODEL EN3S-LO-927-A-A-I/EN3S-L-B-O-W
○	LUCIFER LIGHTING 'CYLINDER 2' FIXED SURFACE MOUNT WITH 60° LUMINAIRE; LAMP 3000K 90+ CR; 926 LUMENS CY2-FB-1-WH-BK-90C15A-30-60
○	SHOWER GRADE, 4" LED RECESSED CAN LIGHT; LITHONIA L3LED T24
○	EXTERIOR GRADE RECESSED CAN LIGHT; JUNO 4" L.E.D., MODEL #IC20LEDG3
J	J-BOX AT CEILING WITH SUSPENDED LIGHT FIXTURE TO BE SELECTED BY THE OWNER
F	SWITCHED, DUCTED EXHAUST FAN, 50 CFM MINIMUM; AUTOMATIC HUMIDITY SENSING UNIT AT MASTER BATH
◯	DMF LIGHTING 'DROSS' 8" ROUND L.E.D. WHITE ROUNOD LUMINAIRE WITH ACRYLIS LENS
	OUTDOOR SCONCE TO BE SELECTED BY OWNER; PROVIDE PHOTOCELL
	WALL MOUNTED FIXTURE TO BE SELECTED BY OWNER
	UNDER CABINET L.E.D. STRIP LIGHT BY CORE; 3.0W/FT. HIGH FLUX
	WAC LIGHTING TRACK (RECESSED IN DRYWALL) WITH SERIES 104 FIXTURES
STEP	WALL MOUNTED RECESSED STEP/WALL FIXTURE; WAC L.E.D. 5" BLACK HORIZ.
WALL	LUCIFER 'IMPACT' RECESSED WALL LIGHT ISL1-2-WH-80L02B-27
SP	CEILING MOUNTED EXTERIOR AUDIO SPEAKER FLUSH MOUNTED AT CEILING
VSC	CEILING MOUNTED EXTERIOR SECURITY CAMERA

IC RATED FIXTURES

general notes

1. REFER TO ELECTRICAL PLANS (SHEET E1.0) FOR ALL LIGHTING AND ELECTRICAL

2. ALL LIGHTING IS TO CONFORM WITH TITLE-24 LIGHTING EFFICIENCY REQUIREMENTS AS INDICATED ON SHEETS A0.1 + A0.2

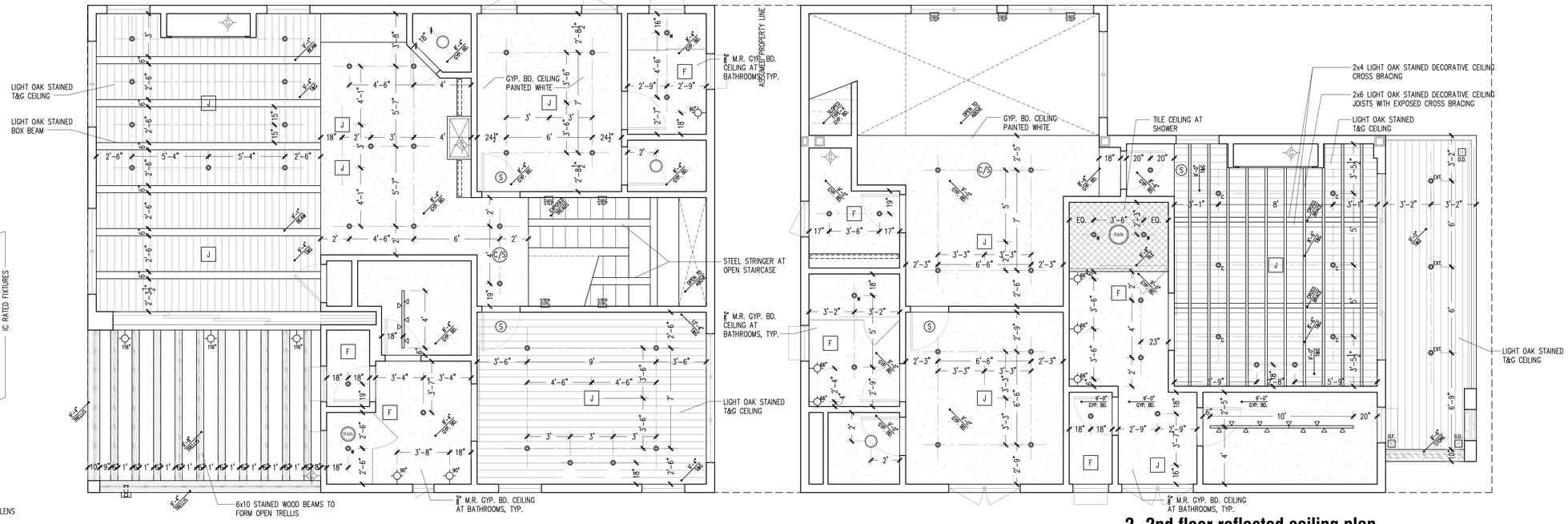

2 2nd floor reflected ceiling plan

A2.0 SCALE: 1/4" = 1'-0"

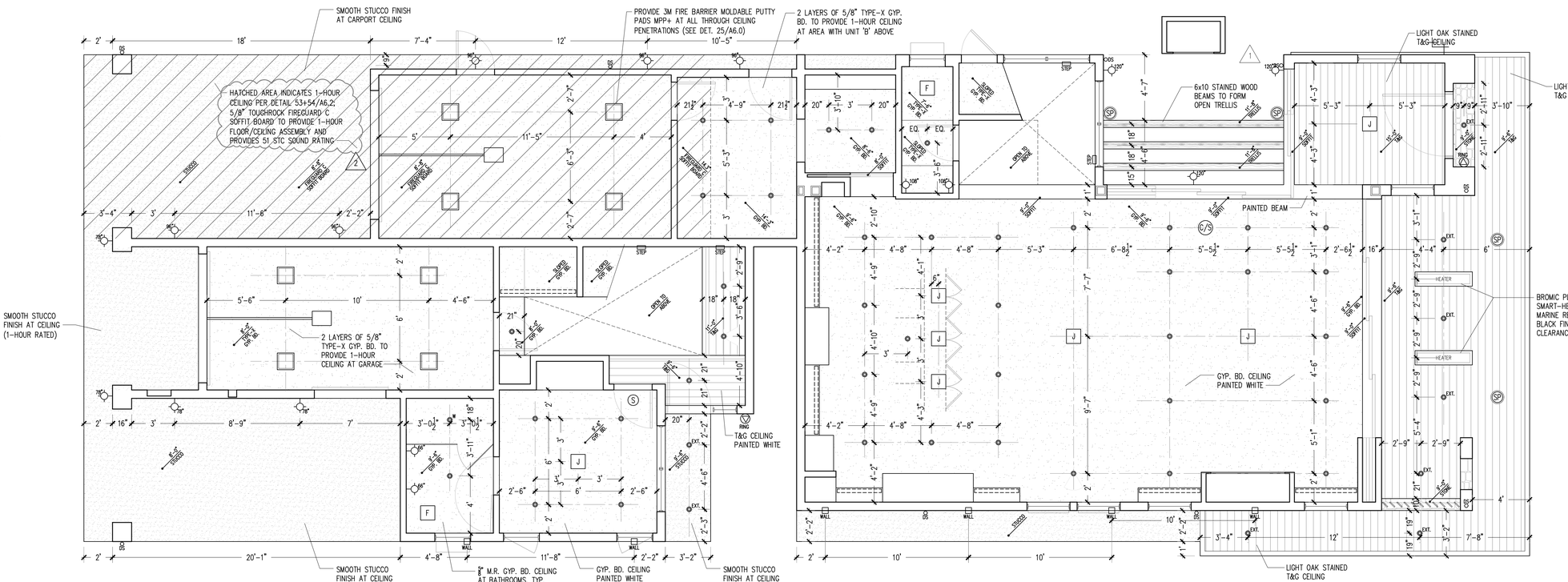

1 1st floor reflected ceiling plan

A2.0 SCALE: 1/4" = 1'-0"

1 CITY CORRECTIONS 16 OCTOBER 2023

2 CITY CORRECTIONS 08 DECEMBER 2023

LICENSED ARCHITECT
ERIC D. AUST
C-29374
31 MAY 2025
RENEWAL DATE
STATE OF CALIFORNIA

0 1' 2' 4' 8' north

22 may 2023

© copyright 2023

job #2117

eric aust architect
62 balboa coves
newport beach, california 92663
tel 949.637.5220

client:
JRC real estate development
14930 alondra blvd.
la mirada, california 90638
tel 562.623.9328

a2.1

3rd floor reflected ceiling plan
1/4"=1'-0"

heliotrope duplex

407 heliotrope avenue
corona del mar, california
92625

ceiling legend

SYMBOL	NAME
S	SMOKE DETECTOR (HARD WIRED W/ BATTERY BACK-UP)
C/S	CARBON MONOXIDE/ SMOKE COMBINATION DETECTOR (HARD WIRED W/ BATTERY BACK-UP)
	ELEMENT 3" SQUARE L.E.D. ADJUSTABLE DOWN LIGHT FLANGELESS BEVEL 40-DEGREE FLOOD MODEL EN3S-LO-927-A-A-I/EN3S-L-B-O-W
	ELEMENT 3" SQUARE L.E.D. ADJUSTABLE DOWN LIGHT FLANGELESS BEVEL 65-DEGREE WIDE FLOOD MODEL EN3S-LO-927-A-A-I/EN3S-L-B-O-W
C	LUCIFER LIGHTING "CYLINDER 2' FIXED SURFACE MOUNT WITH 60° LUMINAIRE; LAMP 3000K 90+ CR; 926 LUMENS CY2-FB-1-WH-BK-90C15A-30-60
W	SHOWER GRADE, 4" LED RECESSED CAN LIGHT; LITHONIA L3LED T24
EXT.	EXTERIOR GRADE RECESSED CAN LIGHT; JUNO 4" L.E.D., MODEL #IC20LEDG3
J	J-BOX AT CEILING WITH SUSPENDED LIGHT FIXTURE TO BE SELECTED BY THE OWNER
F	SWITCHED, DUCTED EXHAUST FAN, 50 CFM MINIMUM; AUTOMATIC HUMIDITY SENSING UNIT AT MASTER BATH
	DMF LIGHTING "DROSS" 8" ROUND L.E.D. WHITE ROUNOD LUMINAIRE WITH ACRYLIS LENS
+60" PS	OUTDOOR SCONCE TO BE SELECTED BY OWNER; PROVIDE PHOTOCELL
+78"	WALL MOUNTED FIXTURE TO BE SELECTED BY OWNER
	UNDER CABINET L.E.D. STRIP LIGHT BY CORE; 3.0W/FT. HIGH FLUX
	WAC LIGHTING TRACK (RECESSED IN DRYWALL) WITH SERIES 104 FIXTURES
STEP	WALL MOUNTED RECESSED STEP/WALL FIXTURE; WAC L.E.D. 5" BLACK HORIZ.
WALL	LUCIFER "IMPACT" RECESSED WALL LIGHT ISL1-2-WH-80L02B-27
SP	CEILING MOUNTED EXTERIOR AUDIO SPEAKER FLUSH MOUNTED AT CEILING
SC	CEILING MOUNTED EXTERIOR SECURITY CAMERA

IC RATED FIXTURES

general notes

1. REFER TO ELECTRICAL PLANS (SHEET E1.0) FOR ALL LIGHTING AND ELECTRICAL

2. ALL LIGHTING IS TO CONFORM WITH TITLE-24 LIGHTING EFFICIENCY REQUIREMENTS AS INDICATED ON SHEETS A0.1 + A0.2

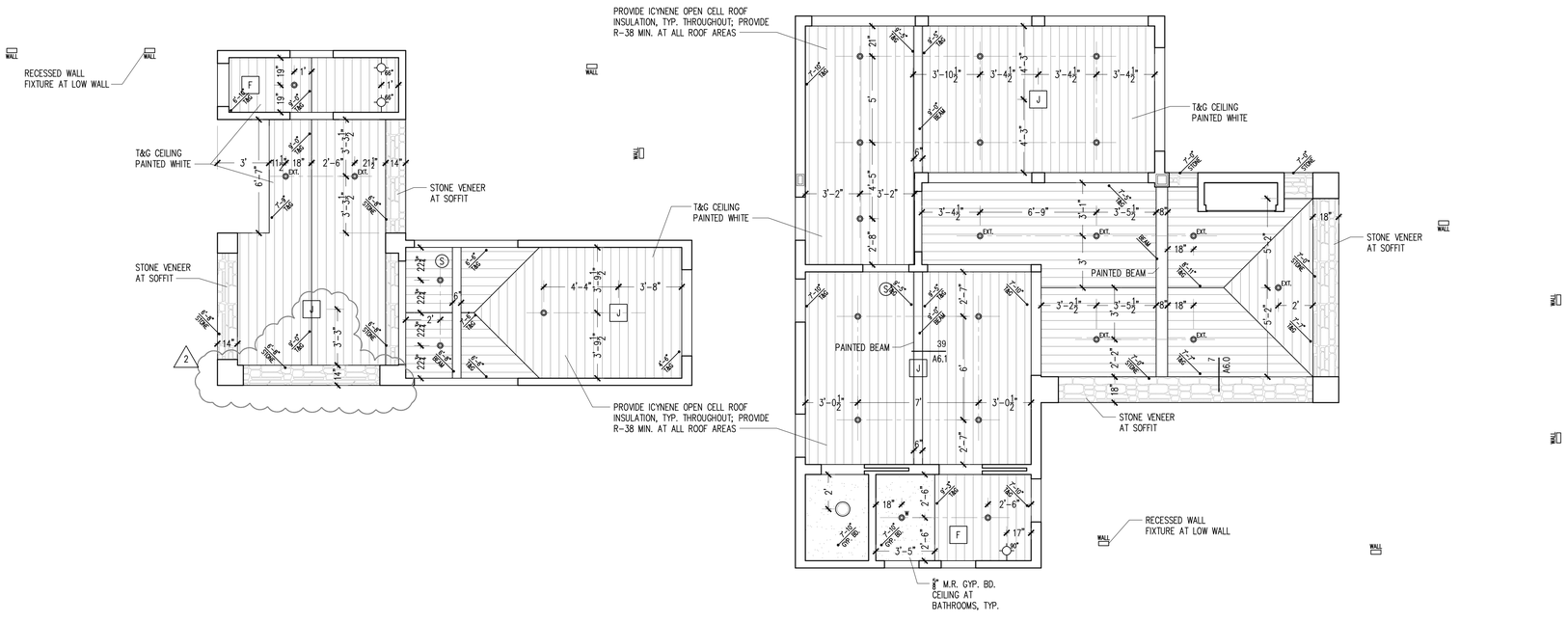

3 3rd floor reflected ceiling plan

A2.1 SCALE: 1/4" = 1'-0"

2 CITY CORRECTIONS 08 DECEMBER 2023

LICENSED ARCHITECT
ERIC D. AUST
C-29374
31 MAY 2025
RENEWAL DATE
STATE OF CALIFORNIA

0 1' 2' 4' 8' north

22 may 2023

© copyright 2023

job #2117

eric aust architect
62 balboa coves
newport beach, california 92663
tel 949.637.5220

client:
JRC real estate development
14930 alondra blvd.
la mirada, california 90638
tel 562.623.9328

a3.0

exterior elevations
1/4"=1'-0"

heliotrope duplex

407 heliotrope avenue
corona del mar, california
92625

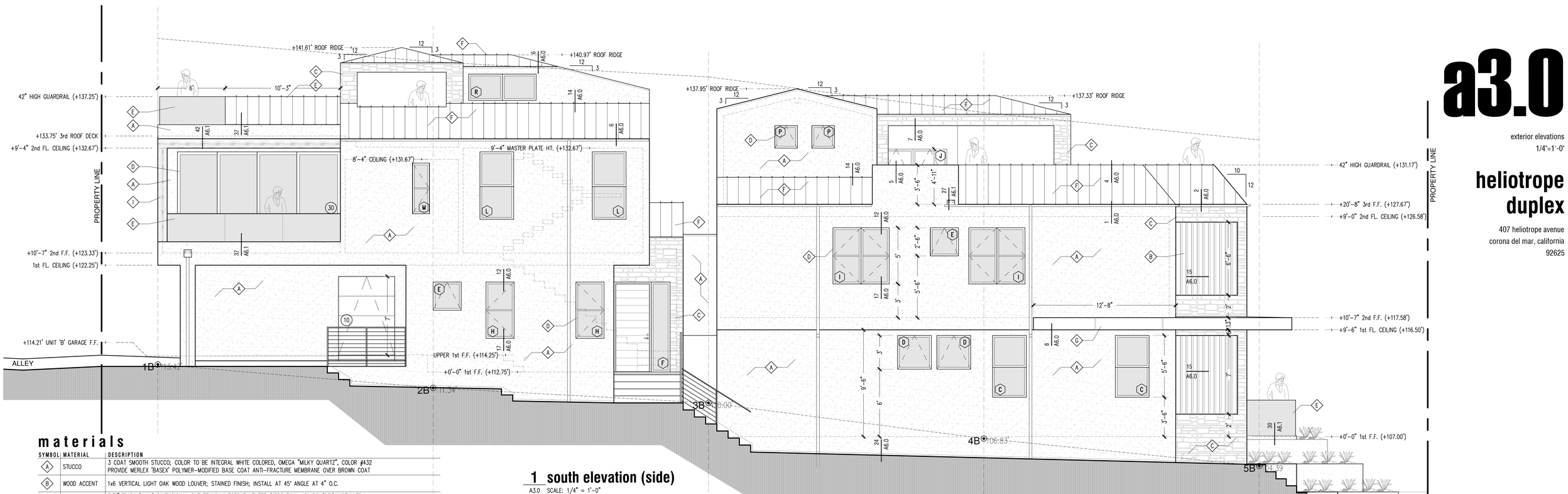

1 south elevation (side)

A3.0 SCALE: 1/4" = 1'-0"

materials

SYMBOL	MATERIAL	DESCRIPTION
A	STUCCO	3 COAT SMOOTH STUCCO; COLOR TO BE INTEGRAL WHITE COLORED, OMEGA "MILKY QUARTZ", COLOR #432 PROVIDE MERLEX 'BASEX' POLYMER-MODIFIED BASE COAT ANTI-FRACTURE MEMBRANE OVER BROWN COAT
B	WOOD ACCENT	1x6 VERTICAL LIGHT OAK WOOD LOUVER; STAINED FINISH; INSTALL AT 45° ANGLE AT 4" O.C.
C	STONE VENEER	3/4" THICK (MAX.) DIMENSIONAL CUT TEXAS LIMESTONE VENEER (LESS THAN 15 LBS./S.F.) INSTALLED O/ SCRATCH & BROWN COAT OVER WIRE LATH O/ TYVEK STUCCOWRAP O/ 1/2" A.P.A. RATED PLYWOOD SHEATHING
D	WINDOW/DOOR	WESTERN WINDOW SYSTEMS WINDOWS/DOOR WITH DARK BRONZE ANODIZED ALUMINUM FINISH
E	GLASS RAILING	42" HIGH, 9/16" THK. LAMINATED, FRAMELESS GLASS GUARDRAIL WITH STAINLESS STEEL SHOE (ESR-3842)
F	METAL ROOF	12" STANDING SEAM METAL ROOF OVER "VERSASHIELD" FIRE-RESISTANT ROOF PROTECTION OVER 30 LB. FELT UNDERLAYMENT, TYP.; METAL ROOF MANUFACTURED BY CUSTOM-BILT METAL, CLASS A ASSEMBLY; ESR #2053; COLOR TO BE DARK BRONZE
G	METAL TRIM	DARK BRONZE METAL 'ALUCOBOND' METAL PANELS
H	GUTTER	DARK BRONZE CONTINUOUS METAL BOX GUTTER AND DOWNSPOUTS TO MATCH METAL ROOF; CONFIRM EXACT DESIGN WITH OWNER
I	TIMBER	LIGHT OAK HEAVY TIMBER TO BE STAINED
J	CONCRETE	HORIZONTAL BOARD FORMED CONCRETE

2 HEIGHT CERTIFICATION INSPECTION SHALL BE REQUIRED FOR THIS PROJECT

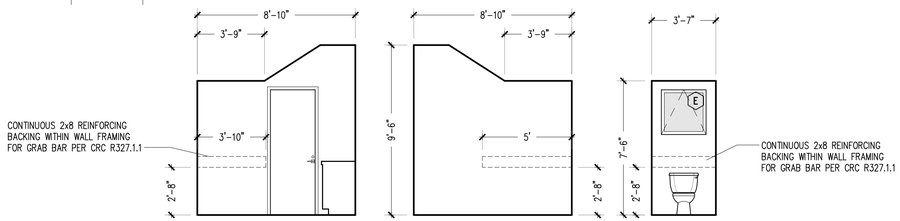

A reinforcement for future grab bars at unit 'A' powder

A3.0 SCALE: 1/4" = 1'-0"

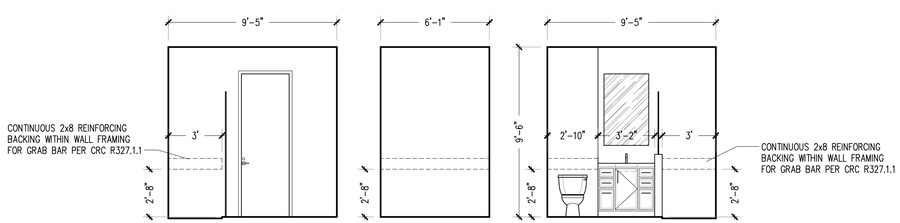

B reinforcement for future grab bars at unit 'B' bath #3b

A3.0 SCALE: 1/4" = 1'-0"

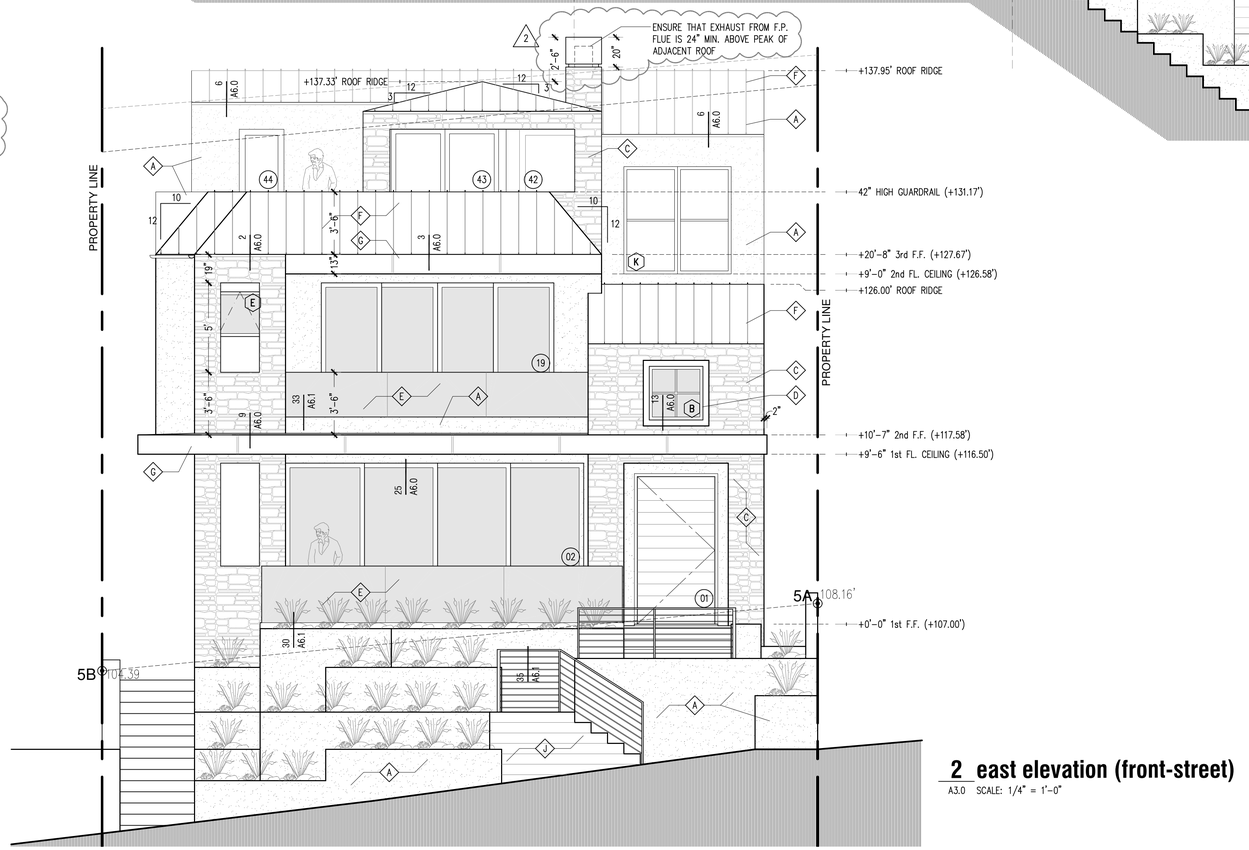

2 east elevation (front-street)

A3.0 SCALE: 1/4" = 1'-0"

1 CITY CORRECTIONS 16 OCTOBER 2023

2 CITY CORRECTIONS 08 DECEMBER 2023

LICENSED ARCHITECT
ERIC D. AUST
C-29374
31 MAY 2025
RENEWAL DATE
STATE OF CALIFORNIA

0 1' 2' 4' 8'

22 may 2023

© copyright 2023

job #2117

eric aust
architect
62 balboa coves
newport beach, california 92663
tel 949.637.5220

client:
JRC real estate development
14930 alondra blvd.
la mirada, california 90638
tel 562.623.9328

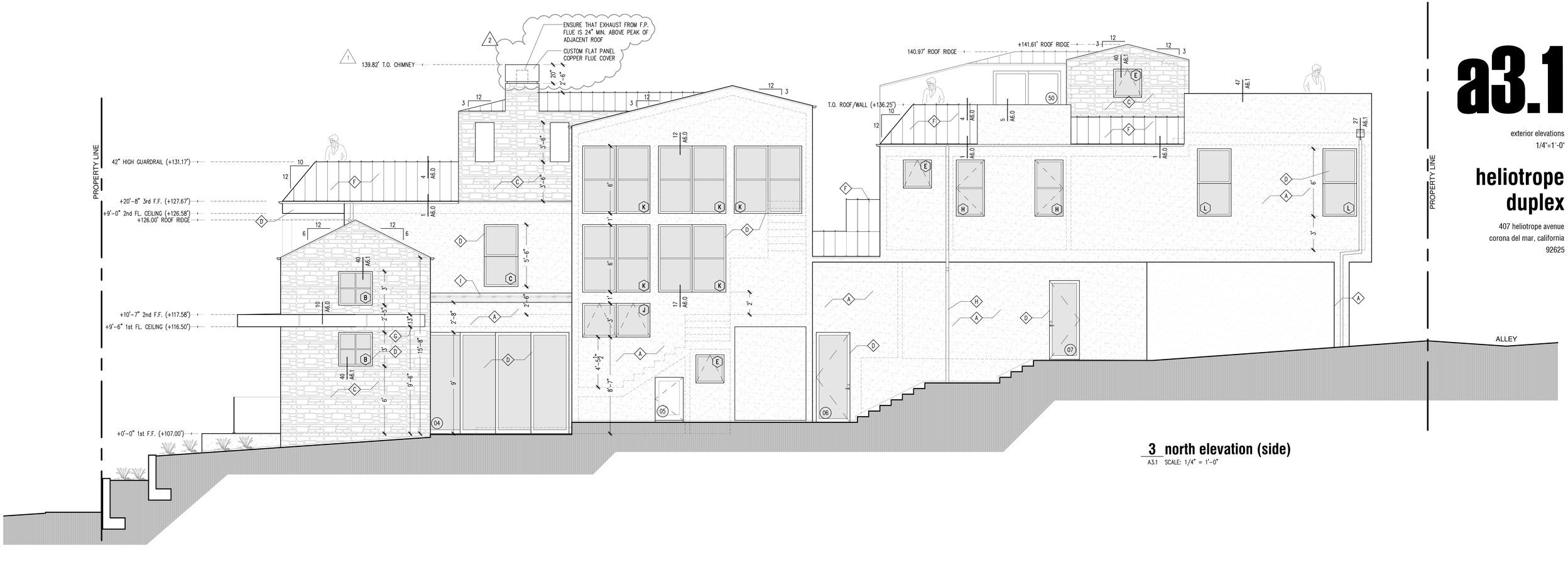

3 north elevation (side)
A3.1 SCALE: 1/4" = 1'-0"

materials

SYMBOL	MATERIAL	DESCRIPTION
A	STUCCO	3 COAT SMOOTH STUCCO; COLOR TO BE INTEGRAL WHITE COLORED, OMEGA "MILKY QUARTZ", COLOR #432 PROVIDE MERLEX 'BASEX' POLYMER-MODIFIED BASE COAT ANTI-FRACTURE MEMBRANE OVER BROWN COAT
B	WOOD ACCENT	1x6 VERTICAL LIGHT OAK WOOD LOUVER; STAINED FINISH; INSTALL AT 45° ANGLE AT 4" O.C.
C	STONE VENEER	3/4" THICK (MAX.) DIMENSIONAL CUT TEXAS LIMESTONE VENEER (LESS THAN 15 LBS./S.F.) INSTALLED O/ SCRATCH & BROWN COAT OVER WIRE LATH O/ TYVEK STUCCOWRAP O/ 1/2" A.P.A. RATED PLYWOOD SHEATHING
D	WINDOW/DOOR	WESTERN WINDOW SYSTEMS WINDOWS/DOOR WITH DARK BRONZE ANODIZED ALUMINUM FINISH
E	GLASS RAILING	42" HIGH, 9/16" THK. LAMINATED, FRAMELESS GLASS GUARDRAIL WITH STAINLESS STEEL SHOE (ESR-3842) 1
F	METAL ROOF	12" STANDING SEAM METAL ROOF OVER "VERSASHIELD" FIRE-RESISTANT ROOF PROTECTION OVER 30 LB. FELT UNDERLAYMENT, TYP.; METAL ROOF MANUFACTURED BY CUSTOM-BILT METAL, CLASS A ASSEMBLY; ESR #2053; COLOR TO BE DARK BRONZE
G	METAL TRIM	DARK BRONZE METAL 'ALUCOBOND' METAL PANELS
H	GUTTER	DARK BRONZE CONTINUOUS METAL BOX GUTTER AND DOWNSPOUTS TO MATCH METAL ROOF; CONFIRM EXACT DESIGN WITH OWNER
I	TIMBER	LIGHT OAK HEAVY TIMBER TO BE STAINED

2 HEIGHT CERTIFICATION INSPECTION SHALL BE REQUIRED FOR THIS PROJECT

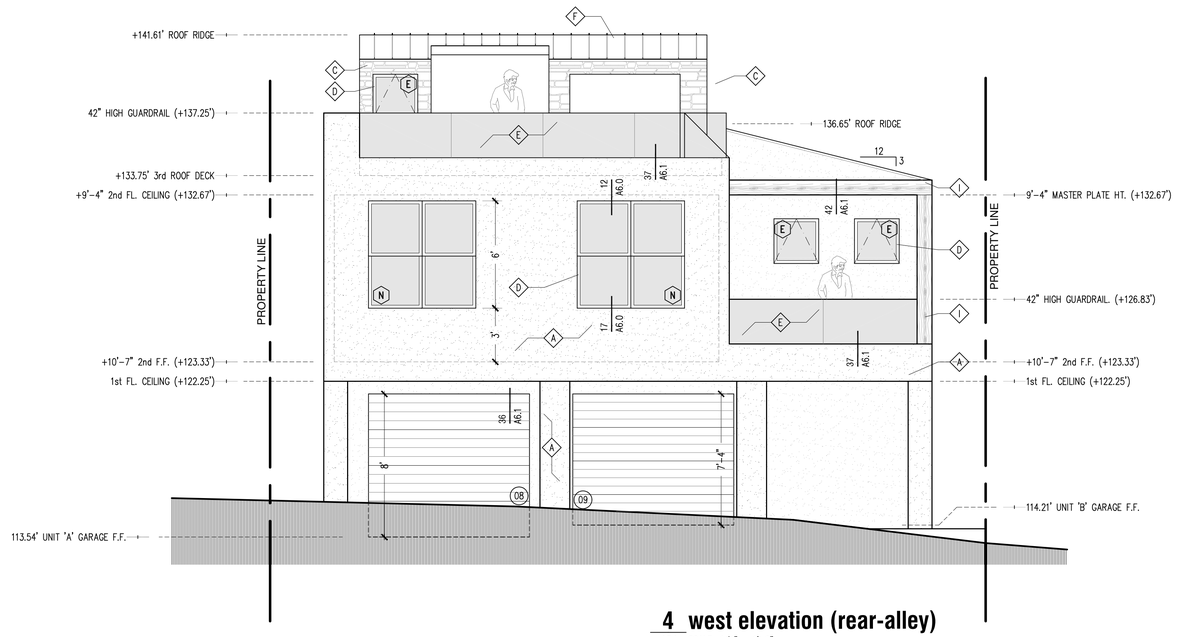

4 west elevation (rear-alley)
A3.1 SCALE: 1/4" = 1'-0"

1 CITY CORRECTIONS 16 OCTOBER 2023

2 CITY CORRECTIONS 08 DECEMBER 2023

LICENSED ARCHITECT
ERIC D. AUST
C-29374
31 MAY 2025
RENEWAL DATE
STATE OF CALIFORNIA

0 1' 2' 4' 8'

22 may 2023
© copyright 2023
job #2117

eric aust architect
62 balboa coves
newport beach, california 92663
tel 949.637.5220

client:
JRC real estate development
14930 alondra blvd.
la mirada, california 90638
tel 562.623.9328

a3.1

exterior elevations
1/4"=1'-0"

heliotrope duplex

407 heliotrope avenue
corona del mar, california
92625

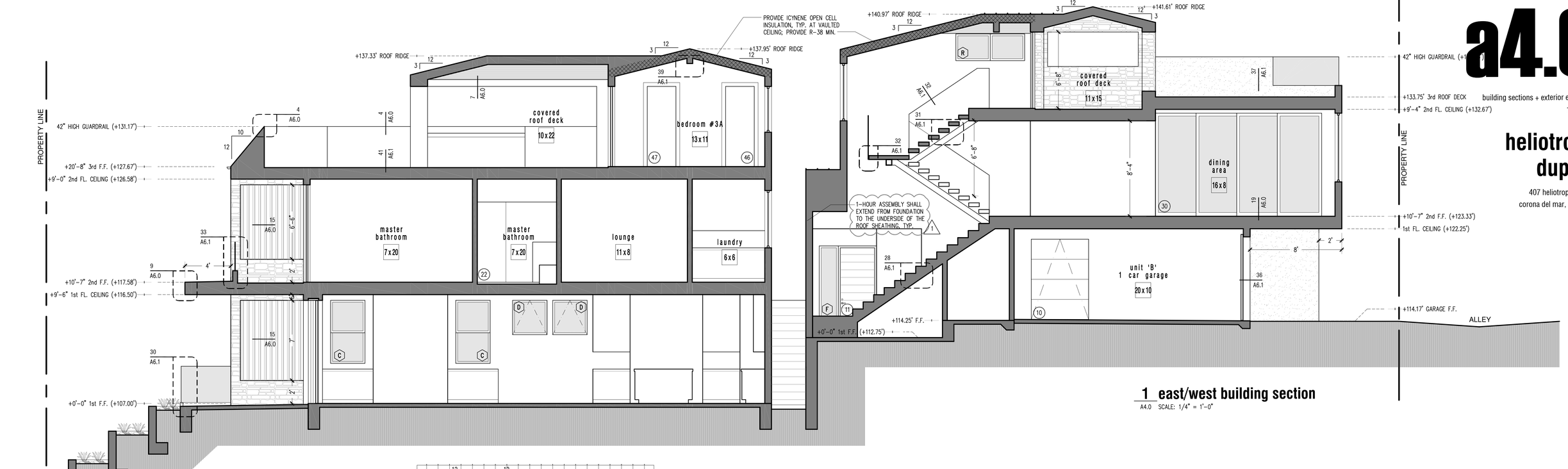

1 east/west building section

A4.0 SCALE: 1/4" = 1'-0"

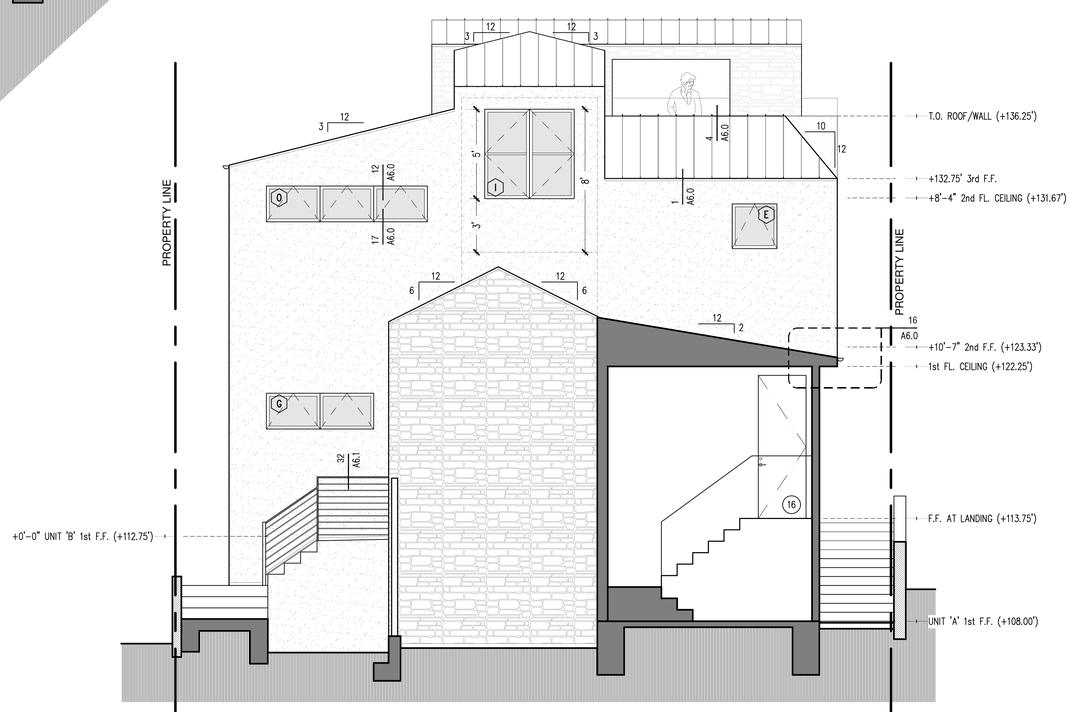

3 east elevation (unit 'B')

A4.0 SCALE: 1/4" = 1'-0"

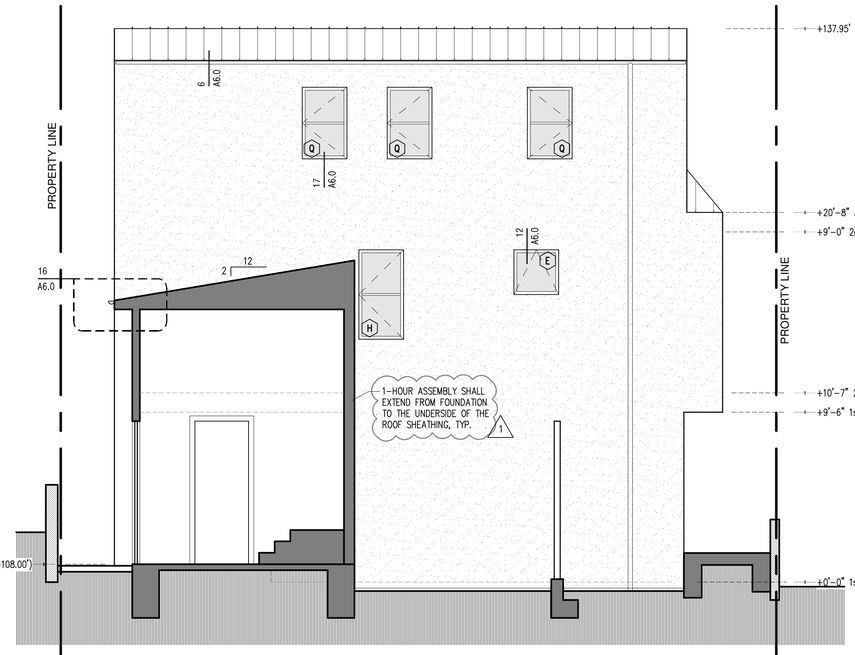

2 west elevation (unit 'A')

A4.0 SCALE: 1/4" = 1'-0"

LICENSED ARCHITECT
ERIC D. AUST
C-29374
31 MAY 2025
RENEWAL DATE
STATE OF CALIFORNIA

22 may 2023

© copyright 2023

job #2117

eric aust
architect
62 balboa coves
newport beach, california 92663
tel 949.637.5220

client:
JRC real estate development
14930 alondra blvd.
la mirada, california 90638
tel 562.623.9328

a4.0

building sections + exterior elevations

1/4"=1'-0"

heliotrope duplex

407 heliotrope avenue
corona del mar, california
92625

partial building section at unit 'B' staircase
SCALE: 1/4" = 1'-0"

5 north/south building section
A4.1 SCALE: 1/4" = 1'-0"

4 north/south building section
A4.1 SCALE: 1/4" = 1'-0"

6 east/west building section
A4.1 SCALE: 1/4" = 1'-0"

a4.1

building sections
1/4"=1'-0"

heliotrope duplex

407 heliotrope avenue
corona del mar, california
92625

LICENSED ARCHITECT
ERIC D. AUST
C-29374
31 MAY 2025
RENEWAL DATE
STATE OF CALIFORNIA

0 1' 2' 4' 8'

22 may 2023
© copyright 2023
job #2117

eric aust
architect
62 balboa coves
newport beach, california 92663
tel 949.637.5220

client:
JRC real estate development
14930 alondra blvd.
la mirada, california 90638
tel 562.623.9328

door elevations

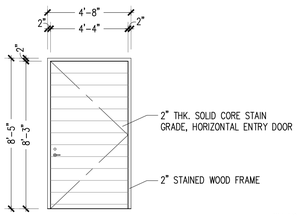

d1 entry door
SCALE: 1/4" = 1'-0"

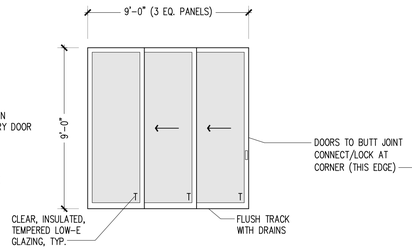

d2 multi-slide door
SCALE: 1/4" = 1'-0"

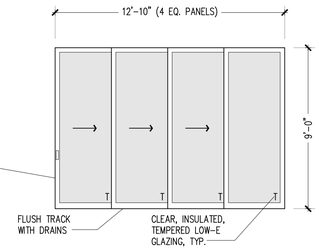

d3 multi-slide door
SCALE: 1/4" = 1'-0"

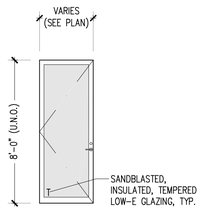

d4 exterior french door
SCALE: 1/4" = 1'-0"

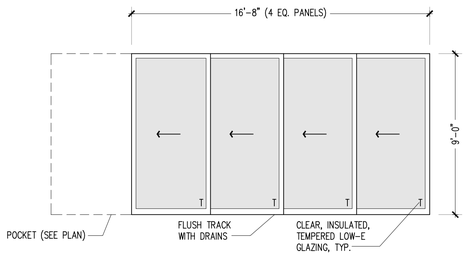

d5 multi-slide door
SCALE: 1/4" = 1'-0"

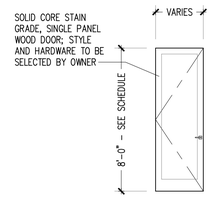

d6 interior door, typ.
SCALE: 1/4" = 1'-0"

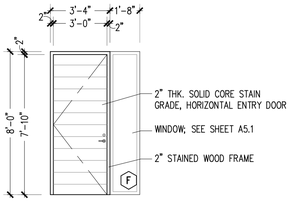

d7 entry door
SCALE: 1/4" = 1'-0"

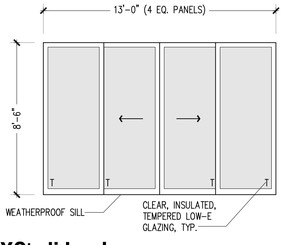

d8 'OXXO' slider door
SCALE: 1/4" = 1'-0"

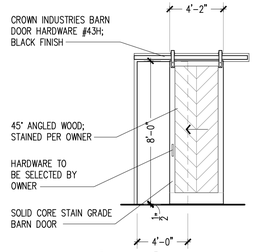

d9 barn door
SCALE: 1/4" = 1'-0"

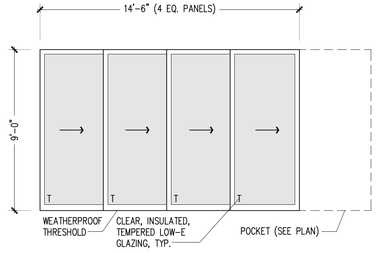

d10 multi-slide door
SCALE: 1/4" = 1'-0"

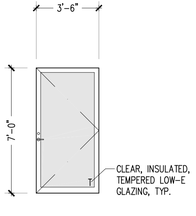

d11 exterior french door
SCALE: 1/4" = 1'-0"

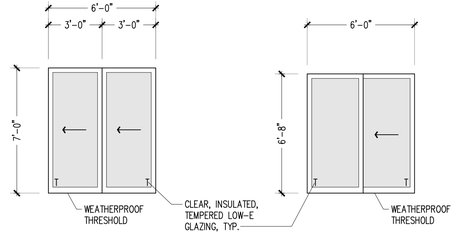

d12 exterior bi-fold door
SCALE: 1/4" = 1'-0"

d13 'OX' slider door
SCALE: 1/4" = 1'-0"

door schedule

*ALL DOOR GLAZING TO BE INSULATED, LOW-E (U-VALUE OF 0.29 OR BETTER)

DOOR NUMBER	DOOR LOCATION	DOOR ELEVATION	DOOR WIDTH	DOOR HEIGHT	DOOR THICKNESS	DOOR MATERIAL	FRAME MATERIAL	U-VALUE	SHGC	DOOR / FRAME RATING	HARDWARE SET	HEAD	SILL	JAMB	NOTES
01	ENTRY (UNIT 'A')	d1	4'-4"	8'-3"	2"	WOOD	WOOD	–	–	–	ENTRY WITH DEAD BOLT	40/A6.1	23/A6.0	40/A6.1 SIM.	EXTERIOR STAINED WOOD ENTRY DOOR
02	GREAT ROOM	d5	16'-8"	9'-0"	2-1/2"	ALUM/GL	ALUM	0.30	0.22	–	PRIVACY W/ DEAD BOLT	20/A6.0	25/A6.0	45/A6.1	4 PANEL 'XXXX' POCKET SLIDER DOOR, FLUSH TRACK W/CLEAR, TEMP. GL.
03	GREAT ROOM/ENTRY	d2	9'-0"	9'-0"	2-1/2"	ALUM/GL	ALUM	0.30	0.22	–	PRIVACY W/ DEAD BOLT	20 SIM./A6.0	25 SIM./A6.0	–	3 PANEL 'OXX' MULTI-SLIDE DOOR, FLUSH TRACK W/ CLEAR, TEMP. GL.
04	GREAT ROOM	d3	12'-10"	9'-0"	2-1/2"	ALUM/GL	ALUM	0.30	0.22	–	PRIVACY W/ DEAD BOLT	20 SIM./A6.0	25 SIM./A6.0	–	4 PANEL 'OXXX' MULTI-SLIDER DOOR, FLUSH TRACK W/CLEAR, TEMP. GL.
05	STORAGE (UNDER STAIR)	3/A3.1	2'-6"	3'-10"	1-3/4"	FIBERGL.	FIBERGL.	–	–	–	ENTRY W/ DEAD BOLT	18/A6.0	23/A6.0	18 SIM./A6.0	EXTERIOR BLACK FIBERGLASS DOOR
06	MUDROOM/SIDE ENTRY	d4	3'-0"	8'-0"	1-3/4"	ALUM/GL	ALUM	0.30	0.22	–	ENTRY W/ DEAD BOLT	18/A6.0	23/A6.0	18 SIM./A6.0	EXTERIOR FRENCH DOOR W/ SANDBLASTED, TEMP. GLAZING
07	1 CAR GARAGE	d4	2'-8"	7'-0"	1-3/4"	ALUM/GL	ALUM	0.30	0.22	–	ENTRY W/ DEAD BOLT	18/A6.0	23/A6.0	18 SIM./A6.0	EXTERIOR FRENCH DOOR W/ SANDBLASTED, TEMP. GLAZING
08	1 CAR GARAGE	4/A3.1	9'-0"	8'-0"	2"	WOOD	WOOD	–	–	–	WALL MOUNTED OPENER	–	–	36/A6.1	CUSTOM WOOD DOOR W/LIFTMASTER 8500 ELITE WALL MOUNTED OPENER
09	1 CAR GARAGE	4/A3.1	9'-0"	7'-4"	2"	WOOD	WOOD	–	–	–	WALL MOUNTED OPENER	–	–	36/A6.1	CUSTOM WOOD DOOR W/LIFTMASTER 8500 ELITE WALL MOUNTED OPENER
10	1 CAR GARAGE	1/A3.0	5'-0"	7'-0"	2"	ALUM.	STUCCO	–	–	–	OVERHEAD OPENER	–	–	36/A6.1	ALUMINUM PANEL OVERHEAD GARAGE DOOR W/ OVERHEAD OPENER
11	ENTRY (UNIT 'B')	d7	3'-0"	7'-10"	2"	WOOD	WOOD	–	–	–	ENTRY WITH DEAD BOLT	18/A6.0	23/A6.0	18/A6.0 SIM.	EXTERIOR STAINED WOOD ENTRY DOOR
12	1 CAR GARAGE (UNIT 'B')	d6	2'-8"	7'-0"	1-3/4"	WOOD	WOOD	–	–	20 MIN.	PRIVACY W/ DEAD BOLT	11/A6.0	–	11 SIM./A6.0	STAIN GRADE FIRE RATED DOOR;SELF CLOSING/SELF LATCHING HARDWARE
13	BEDROOM #3B	d6	2'-8"	8'-0"	1-3/4"	WOOD	WOOD	–	–	–	PRIVACY	11/A6.0	–	11/A6.0	STAIN GRADE INTERIOR DOOR
14	BEDROOM #3B/BATH #3B	d6	2'-8"	8'-0"	1-3/4"	WOOD	WOOD	–	–	–	PRIVACY	11/A6.0	–	11/A6.0	STAIN GRADE INTERIOR DOOR
15	BATH #3B	–	2'-6"	7'-0"	3/8"	GLAZ	–	–	–	–	BLACK PULL	–	–	–	CLEAR FRAMELESS 'STARPHIRE' GLASS SHOWER DOOR; TEMPERED
16	1 CAR GARAGE (UNIT 'A')	d6	2'-8"	8'-0"	1-3/4"	WOOD	WOOD	–	–	20 MIN.	PRIVACY W/ DEAD BOLT	11/A6.0	–	11 SIM./A6.0	STAIN GRADE FIRE RATED DOOR;SELF CLOSING/SELF LATCHING HARDWARE
17	MUDROOM/KITCHEN	d6 SIM.	3'-0"	8'-0"	1-1/2"	WOOD	WOOD	–	–	–	POCKET	11/A6.0	–	11/A6.0	STAIN GRADE INTERIOR POCKET DOOR
18	POWDER	d6	2'-6"	7'-0"	1-1/2"	WOOD	WOOD	–	–	–	PRIVACY	11/A6.0	–	11/A6.0	STAIN GRADE INTERIOR DOOR
19	MASTER BEDROOM	d8	13'-0"	8'-6"	2-1/2"	ALUM/GL	ALUM	0.30	0.22	–	ENTRY W/ DEAD BOLT	18 SIM./A6.0	22/A6.0	18 SIM./A6.0	4 PANEL 'OXXO' DOUBLE SLIDER W/ CLEAR, TEMPERED GLAZING
20	MASTER BEDROOM	d6	2'-8"	8'-0"	1-3/4"	WOOD	WOOD	–	–	–	PRIVACY	11/A6.0	–	11/A6.0	STAIN GRADE INTERIOR DOOR
21	MASTER BEDROOM/BATH	d9	4'-2"	8'-0"	1-1/2"	WOOD	WOOD	–	–	–	BARN DOOR	–	–	–	CROWN INDUSTRIES STAINED BARN DOOR HARDWARE #43H; BLACK FINISH
22	MASTER BATHROOM	–	2'-6"	7'-0"	3/8"	GLAZ	–	–	–	–	BLACK PULL	–	–	–	CLEAR FRAMELESS 'STARPHIRE' GLASS SHOWER DOOR; TEMPERED
23	MASTER BATHROOM (TOILET)	d6	2'-8"	8'-0"	1-3/4"	WOOD	WOOD	–	–	–	PRIVACY	11/A6.0	–	11/A6.0	STAIN GRADE INTERIOR DOOR
24	MASTER BATHROOM (CLOSET)	d6	2'-8"	8'-0"	1-3/4"	WOOD	WOOD	–	–	–	PASSAGE	11/A6.0	–	11/A6.0	STAIN GRADE INTERIOR DOOR
25	BEDROOM #2A	d6	2'-8"	8'-0"	1-3/4"	WOOD	WOOD	–	–	–	PRIVACY	11/A6.0	–	11/A6.0	STAIN GRADE INTERIOR DOOR
26	BEDROOM #2A (CLOSET)	d6	2'-8"	8'-0"	1-3/4"	WOOD	WOOD	–	–	–	PASSAGE	11/A6.0	–	11/A6.0	STAIN GRADE INTERIOR DOOR
27	BEDROOM #2A/BATH #2A	d6	2'-8"	8'-0"	1-3/4"	WOOD	WOOD	–	–	–	PRIVACY	11/A6.0	–	11/A6.0	STAIN GRADE INTERIOR DOOR
28	BATH #2A	–	2'-6"	7'-0"	3/8"	GLAZ	–	–	–	–	BLACK PULL	–	–	–	CLEAR FRAMELESS 'STARPHIRE' GLASS SHOWER DOOR; TEMPERED
29	LAUNDRY	d6	2'-8"	8'-0"	1-3/4"	WOOD	WOOD	–	–	–	PASSAGE	11/A6.0	–	11/A6.0	STAIN GRADE INTERIOR DOOR
30	GREAT ROOM	d10	14'-6"	9'-0"	2-1/2"	ALUM/GL	ALUM	0.30	0.22	–	PRIVACY W/ DEAD BOLT	20 SIM./A6.0	19/A6.0	45/A6.1	4 PANEL 'XXXX' POCKET SLIDER DOOR, FLUSH TRACK W/CLEAR, TEMP. GL.
31	DINING AREA(F.A.U. CLOSET)	d6	2'-8"	8'-0"	1-3/4"	WOOD	WOOD	–	–	–	PASSAGE	11/A6.0	–	11/A6.0	STAIN GRADE INTERIOR DOOR
32	KITCHEN PANTRY	d6	2'-6"	8'-0"	1-1/2"	WOOD	WOOD	–	–	–	PASSAGE	11/A6.0	–	11/A6.0	STAIN GRADE INTERIOR DOOR
33	BEDROOM #2B	d6	2'-8"	8'-0"	1-3/4"	WOOD	WOOD	–	–	–	PRIVACY	11/A6.0	–	11/A6.0	STAIN GRADE INTERIOR DOOR
34	BEDROOM #2B (CLOSET)	d6	2'-8"	8'-0"	1-3/4"	WOOD	WOOD	–	–	–	PASSAGE	11/A6.0	–	11/A6.0	STAIN GRADE INTERIOR DOOR
35	BEDROOM #2B/BATH #2B	d6	2'-8"	8'-0"	1-3/4"	WOOD	WOOD	–	–	–	PRIVACY	11/A6.0	–	11/A6.0	STAIN GRADE INTERIOR DOOR
36	BATH #2B	–	5'-6"	5'-0"	3/8"	GLAZ	–	–	–	–	BLACK PULL	–	–	–	CLEAR FRAMELESS 'STARPHIRE' GLASS SLIDER DOOR; TEMPERED
37	MASTER BEDROOM	d6	2'-8"	8'-0"	1-3/4"	WOOD	WOOD	–	–	–	PRIVACY	11/A6.0	–	11/A6.0	STAIN GRADE INTERIOR DOOR
38	MASTER BEDROOM/BATH	d9	4'-2"	8'-0"	1-1/2"	WOOD	WOOD	–	–	–	BARN DOOR	–	–	–	CROWN INDUSTRIES STAINED BARN DOOR HARDWARE #43H; BLACK FINISH
39	MASTER BATHROOM	–	2'-6"	7'-0"	3/8"	GLAZ	–	–	–	–	BLACK PULL	–	–	–	CLEAR FRAMELESS 'STARPHIRE' GLASS SHOWER DOOR; TEMPERED
40	MASTER BATHROOM (TOILET)	d6	2'-6"	8'-0"	1-3/4"	WOOD	WOOD	–	–	–	PRIVACY	11/A6.0	–	11/A6.0	STAIN GRADE INTERIOR DOOR
41	MASTER BATHROOM (CLOSET)	d6	2'-8"	8'-0"	1-3/4"	WOOD	WOOD	–	–	–	PASSAGE	11/A6.0	–	11/A6.0	STAIN GRADE INTERIOR DOOR
42	3rd FLOOR LANDING	d11	3'-6"	7'-0"	1-3/4"	ALUM/GL	ALUM	0.30	0.22	–	ENTRY W/ DEAD BOLT	18 SIM./A6.0	46/A6.1	18 SIM./A6.0	EXTERIOR FRENCH DOOR W/ CLEAR, TEMP. GLAZING; *DOOR ALARM
43	BEDROOM #3A	d12	6'-0"	7'-0"	1-3/4"	ALUM/GL	ALUM	0.30	0.22	–	ENTRY W/ DEAD BOLT	18 SIM./A6.0	22 SIM./A6.0	18 SIM./A6.0	EXTERIOR BI-FOLD DOOR W/ CLEAR, TEMP. GLAZING; *DOOR ALARM
44	BATH #3A	d4	2'-6"	7'-0"	1-3/4"	ALUM/GL	ALUM	0.30	0.22	–	ENTRY W/ DEAD BOLT	18 SIM./A6.0	46/A6.1	18 SIM./A6.0	EXTERIOR FRENCH DOOR W/ SANDBLASTED, TEMP. GLAZING; *DOOR ALARM
45	BEDROOM #3A	d6	2'-8"	7'-0"	1-3/4"	WOOD	WOOD	–	–	–	PRIVACY	11/A6.0	–	11/A6.0	STAIN GRADE INTERIOR DOOR
46	BEDROOM #3A CLOSET	d6	2'-6"	7'-0"	1-1/2"	WOOD	WOOD	–	–	–	POCKET	11/A6.0	–	11/A6.0	STAIN GRADE INTERIOR POCKET DOOR
47	BEDROOM #3A/BATH #3A	d6	2'-6"	7'-0"	1-1/2"	WOOD	WOOD	–	–	–	POCKET	11/A6.0	–	11/A6.0	STAIN GRADE INTERIOR POCKET DOOR
48	BATH #3A	–	5'-6"	5'-0"	3/8"	GLAZ	–	–	–	–	BLACK PULL	–	–	–	CLEAR FRAMELESS 'STARPHIRE' GLASS SLIDER DOOR; TEMPERED
49	3rd FLOOR LANDING	d13	6'-0"	6'-8"	2-1/2"	ALUM/GL	ALUM	0.30	0.22	–	ENTRY W/ DEAD BOLT	18 SIM./A6.0	22/A6.0	18 SIM./A6.0	2 PANEL 'OX' SLIDER W/ CLEAR, TEMPERED GLAZING; *DOOR ALARM
50	3rd FLOOR LANDING	d13	6'-0"	6'-8"	2-1/2"	ALUM/GL	ALUM	0.30	0.22	–	ENTRY W/ DEAD BOLT	18 SIM./A6.0	22/A6.0	18 SIM./A6.0	2 PANEL 'OX' SLIDER W/ CLEAR, TEMPERED GLAZING; *DOOR ALARM
51	POWDER	d4	2'-6"	6'-8"	1-3/4"	ALUM/GL	ALUM	0.30	0.22	–	ENTRY W/ DEAD BOLT	18 SIM./A6.0	46/A6.1	18 SIM./A6.0	EXTERIOR FRENCH DOOR W/ SANDBLASTED, TEMP. GLAZING
G01	SIDE YARD/FRONT (N.W.)	–	3'-0"	6'-0"	3-1/2"	WOOD	WOOD	–	–	–	GATE	–	–	–	WOOD GATE; SELF-CLOSING, SELF-LATCHING HARDWARE(+60" MIN)

door general notes

MULTI-SLIDE AND SLIDER DOORS TO BE PROVIDED BY: WESTERN DOORS & WINDOWS, 7600 SERIES E366 WITH INSULATED, ARGON GAS; BLACK FINISH

STANDARD GLAZING TO BE INSULATED, LOW-E WITH ARGON GAS (MAXIMUM U-VALUE AND SHGC NOTED ON THE TABLE AND AS REQUIRED BY THE ENERGY COMPLIANCE REPORT); CONFIRM WITH TITLE 24 ENERGY CALCULATIONS ON SHEET A0.1 – A0.6

FENESTRATIONS MUST HAVE TEMPORARY AND PERMANENT LABELS

a5.0

door schedule
1/4"=1'-0"

heliotrope duplex

407 heliotrope avenue
corona del mar, california
92625

1 CITY CORRECTIONS
16 OCTOBER 2023

LICENSED ARCHITECT
ERIC D. AUST
C-29374
31 MAY 2025
RENEWAL DATE
STATE OF CALIFORNIA

0 1' 2' 4' 8'

22 may 2023
© copyright 2023
job #2117

eric aust
architect
62 balboa coves
newport beach, california 92663
tel 949.637.5220

client:
JRC real estate development
14930 alondra blvd.
la mirada, california 90638
tel 562.623.9328

window elevations

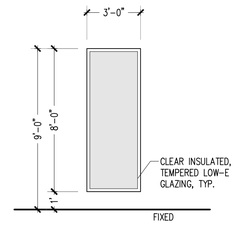

A **window type 'A'**
SCALE: 1/4" = 1'-0" QTY: 1

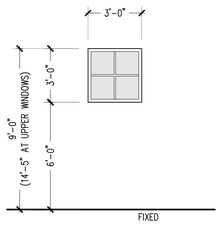

B **window type 'B'**
SCALE: 1/4" = 1'-0" QTY: 3

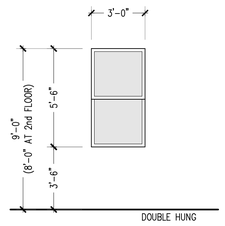

C **window type 'C'**
SCALE: 1/4" = 1'-0" QTY: 3

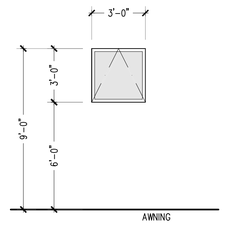

D **window type 'D'**
SCALE: 1/4" = 1'-0" QTY: 2

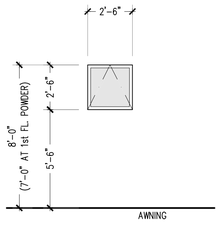

E **window type 'E'**
SCALE: 1/4" = 1'-0" QTY: 11

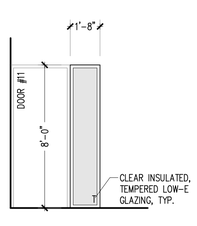

F **window type 'F'**
SCALE: 1/4" = 1'-0" QTY: 1

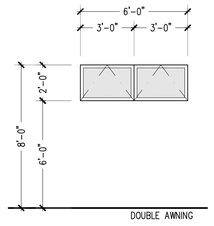

G **window type 'G'**
SCALE: 1/4" = 1'-0" QTY: 1

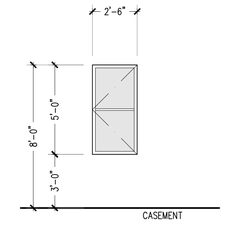

H **window type 'H'**
SCALE: 1/4" = 1'-0" QTY: 3

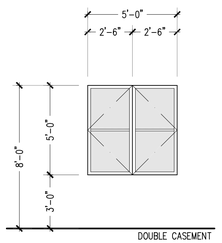

I **window type 'I'**
SCALE: 1/4" = 1'-0" QTY: 3

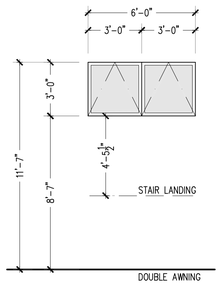

J **window type 'J'**
SCALE: 1/4" = 1'-0" QTY: 2

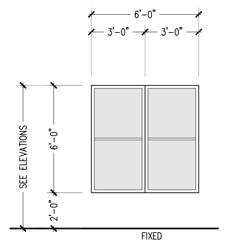

K **window type 'K'**
SCALE: 1/4" = 1'-0" QTY: 7

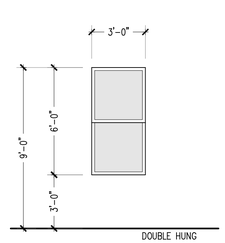

L **window type 'L'**
SCALE: 1/4" = 1'-0" QTY: 4

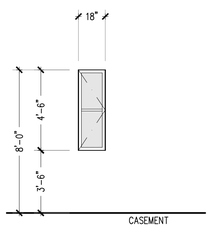

M **window type 'M'**
SCALE: 1/4" = 1'-0" QTY: 1

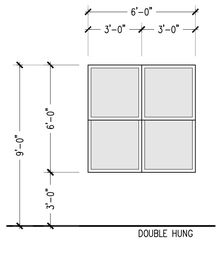

N **window type 'N'**
SCALE: 1/4" = 1'-0" QTY: 2

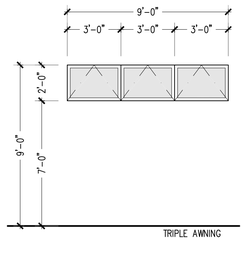

O **window type 'O'**
SCALE: 1/4" = 1'-0" QTY: 1

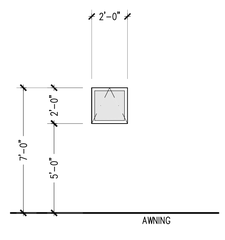

P **window type 'P'**
SCALE: 1/4" = 1'-0" QTY: 2

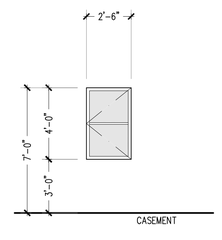

Q **window type 'Q'**
SCALE: 1/4" = 1'-0" QTY: 3

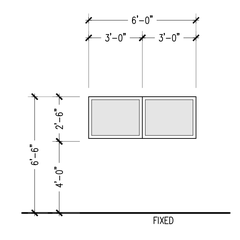

R **window type 'R'**
SCALE: 1/4" = 1'-0" QTY: 1

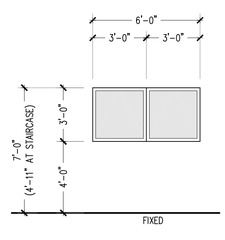

S **window type 'S'**
SCALE: 1/4" = 1'-0" QTY: 3

window schedule

WINDOW LETTER	WINDOW LOCATION	WINDOW WIDTH	WINDOW HEIGHT	WINDOW DESCRIPTION	WINDOW QUANTITY	WINDOW MATERIAL	COLOR (EXTERIOR)	GLAZING TYPE	TEMPERED	U-VALUE	SHGC	HEAD	SILL	JAMB	NOTES
A	ENTRY	3'-0"	8'-0"	FIXED	1	ALUM	BLACK	DUAL	TEMP.	0.28	0.23	40/A6.1	40/A6.1	40 SIM./A6.1	CLEAR, INSULATED TEMPERED GLAZING
B	ENTRY	3'-0"	3'-0"	FIXED	3	ALUM	BLACK	DUAL	–	0.28	0.23	13/A6.0+40/A6.1	13/A6.0+40/A6.1	13/A6.0+40/A6.1	CLEAR, INSULATED GLAZING
C	MULTIPLE LOCATIONS	3'-0"	5'-6"	DOUBLE HUNG	3	ALUM	BLACK	DUAL	–	0.28	0.23	12/A6.0	17/A6.0	12 SIM./A6.0	CLEAR, INSULATED GLAZING
D	DINING ROOM	3'-0"	3'-0"	AWNING	2	ALUM	BLACK	DUAL	–	0.28	0.23	12/A6.0	17/A6.0	12 SIM./A6.0	CLEAR, INSULATED GLAZING
E	MULTIPLE LOCATIONS	2'-6"	2'-6"	AWNING	11	ALUM	BLACK	DUAL	–	0.28	0.23	12/A6.0+40/A6.1	17/A6.0+40/A6.1	12/A6.0+40/A6.1	CLEAR, INSULATED GLAZING
F	ENTRY (UNIT 'B')	1'-8"	8'-0"	FIXED	1	ALUM	BLACK	DUAL	TEMP.	0.28	0.23	40/A6.1	21/A6.0	40 SIM./A6.1	CLEAR, INSULATED TEMPERED GLAZING
G	BEDROOM #3B	6'-0"	2'-0"	DOUBLE AWNING	1	ALUM	BLACK	DUAL	–	0.28	0.23	12/A6.0	17/A6.0	12 SIM./A6.0	CLEAR, INSULATED GLAZING
H	BEDROOM #3B/LAUNDRY	2'-6"	5'-0"	CASEMENT	3	ALUM	BLACK	DUAL	–	0.28	0.23	12/A6.0	17/A6.0	12 SIM./A6.0	CLEAR, INSULATED GLAZING
I	MULTIPLE LOCATIONS	5'-0"	5'-0"	DOUBLE CASEMENT	3	ALUM	BLACK	DUAL	TEMP.	0.28	0.23	12/A6.0	17/A6.0	12 SIM./A6.0	CLEAR, INSULATED GLAZING
J	STAIRCASE	6'-0"	3'-0"	DOUBLE AWNING	2	ALUM	BLACK	DUAL	–	0.28	0.23	12/A6.0	17/A6.0	12 SIM./A6.0	CLEAR, INSULATED GLAZING
K	STAIRCASE	6'-0"	6'-0"	FIXED	7	ALUM	BLACK	DUAL	TEMP.	0.28	0.23	12/A6.0	17/A6.0	12 SIM./A6.0	CLEAR, INSULATED GLAZING
L	MULTIPLE LOCATIONS	3'-0"	6'-0"	DOUBLE HUNG	4	ALUM	BLACK	DUAL	–	0.28	0.23	12/A6.0	17/A6.0	12 SIM./A6.0	CLEAR, INSULATED GLAZING
M	MASTER BATHROOM	1'-6"	4'-6"	CASEMENT	1	ALUM	BLACK	DUAL	–	0.28	0.23	12/A6.0	17/A6.0	12 SIM./A6.0	CLEAR, INSULATED GLAZING
N	GREAT ROOM	6'-0"	6'-0"	DOUBLE HUNG	2	ALUM	BLACK	DUAL	–	0.28	0.23	12/A6.0	17/A6.0	12 SIM./A6.0	CLEAR, INSULATED GLAZING
O	MASTER BEDROOM	9'-0"	2'-0"	DOUBLE AWNING	1	ALUM	BLACK	DUAL	–	0.28	0.23	12/A6.0	17/A6.0	12 SIM./A6.0	CLEAR, INSULATED GLAZING
P	BATH #3A	2'-0"	2'-0"	AWNING	2	ALUM	BLACK	DUAL	–	0.28	0.23	12/A6.0	17/A6.0	12 SIM./A6.0	CLEAR, INSULATED GLAZING
Q	BEDROOM #3A/LANDING	2'-6"	4'-0"	CASEMENT	3	ALUM	BLACK	DUAL	–	0.28	0.23	12/A6.0	17/A6.0	12 SIM./A6.0	CLEAR, INSULATED GLAZING
R	STAIRCASE	6'-0"	2'-6"	FIXED	1	ALUM	BLACK	DUAL	TEMP.	0.28	0.23	12/A6.0	17/A6.0	12 SIM./A6.0	CLEAR, INSULATED GLAZING
S	BED #3A/STAIRCASE	6'-0"	3'-0"	FIXED	3	ALUM	BLACK	DUAL	–	0.28	0.23	12/A6.0	17/A6.0	12 SIM./A6.0	CLEAR, INSULATED GLAZING

window general notes

WINDOWS TO BE JELD-WEN 'SITELINE'
(OR APPROVED EQUAL)
COLOR: BLACK ALUMINUM CLAD EXTERIOR WITH BLACK FACTORY PAINTED INTERIOR FINISH

STANDARD GLAZING TO BE INSULATED, LOW-E WITH ARGON GAS (MAXIMUM U-VALUE AND SHGC NOTED ON THE TABLE AND AS REQUIRED BY THE ENERGY COMPLIANCE REPORT); CONFIRM WITH TITLE 24 ENERGY CALCULATIONS ON SHEET A0.1 – A0.6

SCREENS TO BE PROVIDED ON ALL OPERABLE WINDOW

FENESTRATIONS MUST HAVE TEMPORARY AND PERMANENT LABELS

SEE DETAIL 34/A6.1 FOR TYPICAL WATERPROOFING DETAIL AT WINDOWS

SEE DETAILS 12, 13, 17, 21/A6.0 AND 40/A6.1 FOR TYPICAL WINDOW DETAILS

a5.1

window schedule
1/4"=1'-0"

heliotrope duplex

407 heliotrope avenue
corona del mar, california
92625

LICENSED ARCHITECT
ERIC D. AUST
C-29374
31 MAY 2025
RENEWAL DATE
STATE OF CALIFORNIA

0 1' 2' 4' 8'

22 may 2023
© copyright 2023
job #2117

eric aust architect
62 balboa coves
newport beach, california 92663
tel 949.637.5220

client:
JRC real estate development
14930 alondra blvd.
la mirada, california 90638
tel 562.623.9328

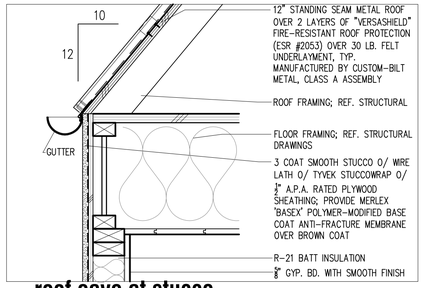

1 roof eave at stucco
SCALE: 1-1/2" = 1'-0"

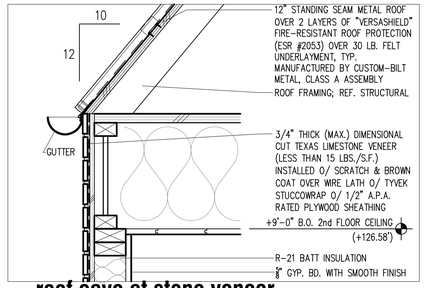

2 roof eave at stone veneer
SCALE: 1-1/2" = 1'-0"

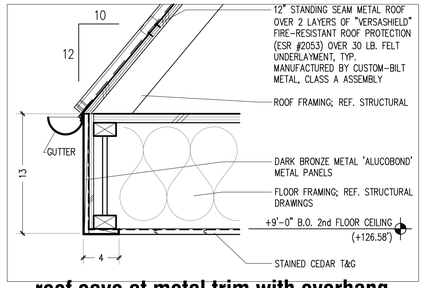

3 roof eave at metal trim with overhang
SCALE: 1-1/2" = 1'-0"

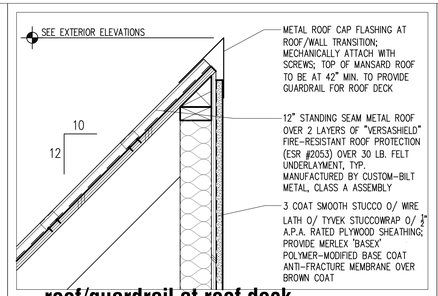

4 roof/guardrail at roof deck
SCALE: 1-1/2" = 1'-0"

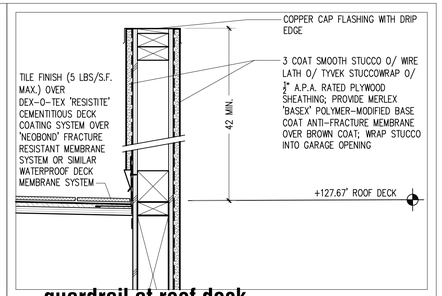

5 guardrail at roof deck
SCALE: 1-1/2" = 1'-0"

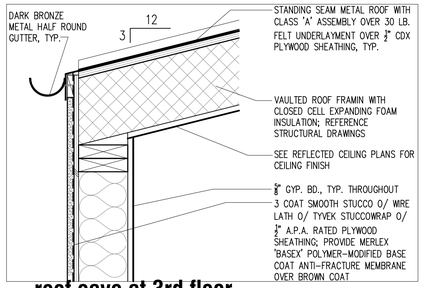

6 roof eave at 3rd floor
SCALE: 1-1/2" = 1'-0"

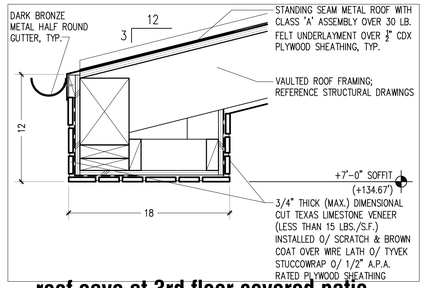

7 roof eave at 3rd floor covered patio
SCALE: 1-1/2" = 1'-0"

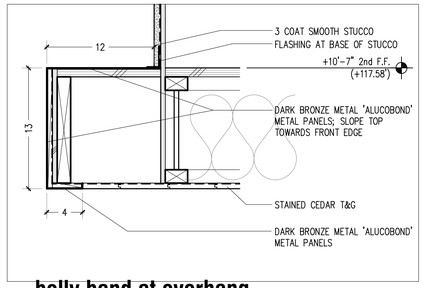

8 belly band at overhang
SCALE: 1-1/2" = 1'-0"

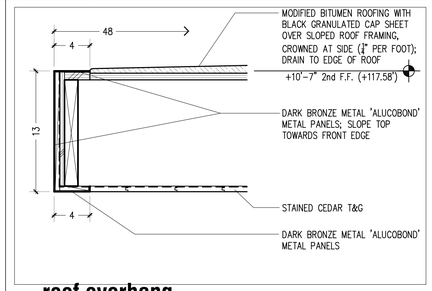

9 roof overhang
SCALE: 1-1/2" = 1'-0"

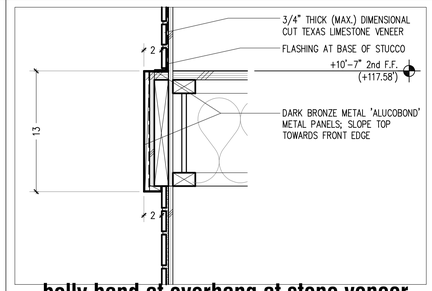

10 belly band at overhang at stone veneer
SCALE: 1-1/2" = 1'-0"

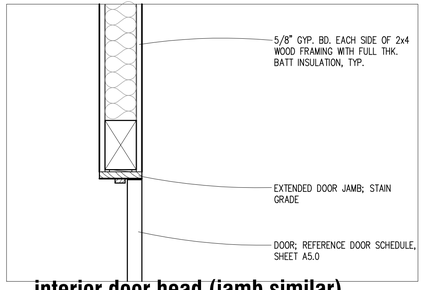

11 interior door head (jamb similar)
SCALE: 1-1/2" = 1'-0"

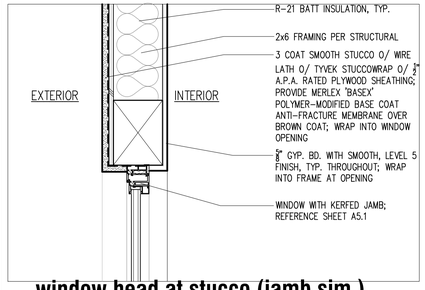

12 window head at stucco (jamb sim.)
SCALE: 1-1/2" = 1'-0"

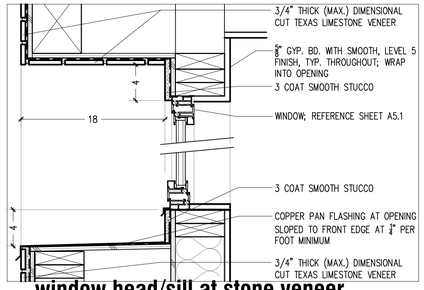

13 window head/sill at stone veneer
SCALE: 1-1/2" = 1'-0"

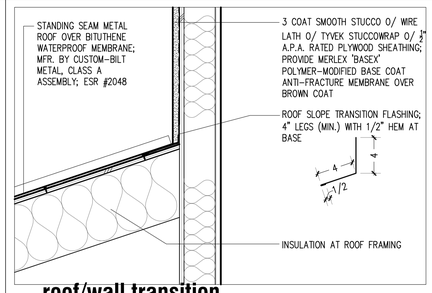

14 roof/wall transition
SCALE: 1-1/2" = 1'-0"

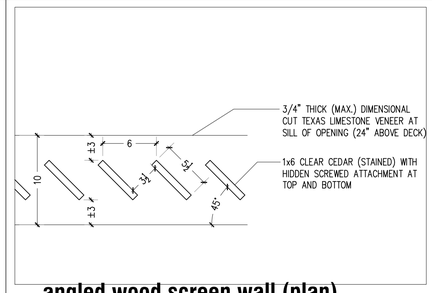

15 angled wood screen wall (plan)
SCALE: 1-1/2" = 1'-0"

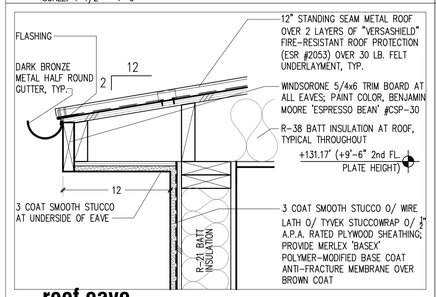

16 roof eave
SCALE: 1-1/2" = 1'-0"

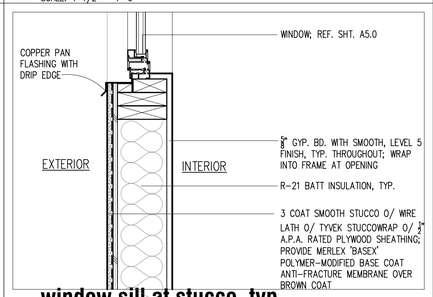

17 window sill at stucco, typ.
SCALE: 1-1/2" = 1'-0"

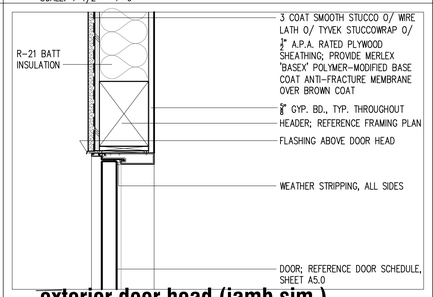

18 exterior door head (jamb sim.)
SCALE: 1-1/2" = 1'-0"

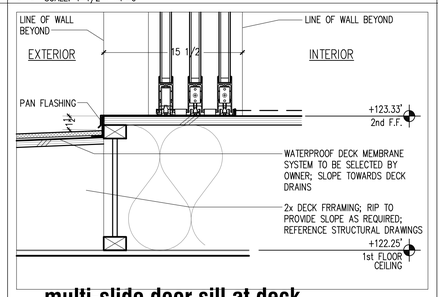

19 multi-slide door sill at deck
SCALE: 1-1/2" = 1'-0"

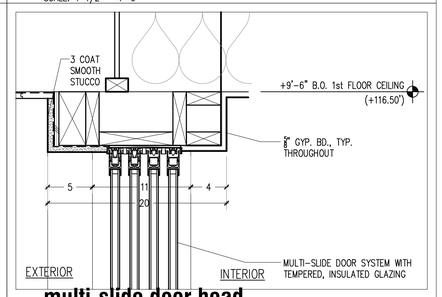

20 multi-slide door head
SCALE: 1-1/2" = 1'-0"

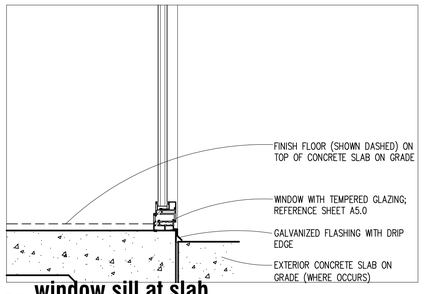

21 window sill at slab
SCALE: 1-1/2" = 1'-0"

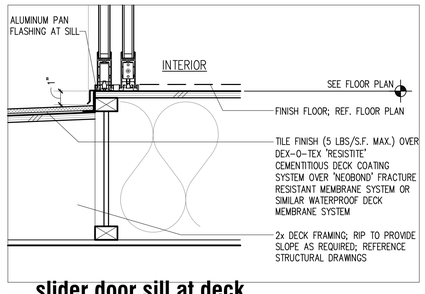

22 slider door sill at deck
SCALE: 1-1/2" = 1'-0"

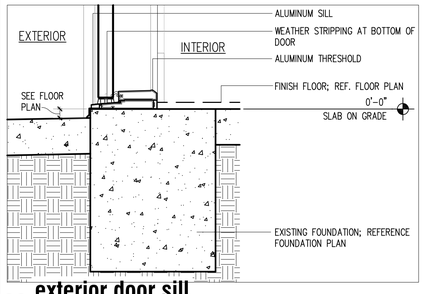

23 exterior door sill
SCALE: 1-1/2" = 1'-0"

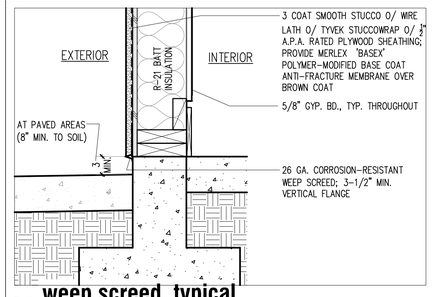

24 weep screed, typical
SCALE: 1-1/2" = 1'-0"

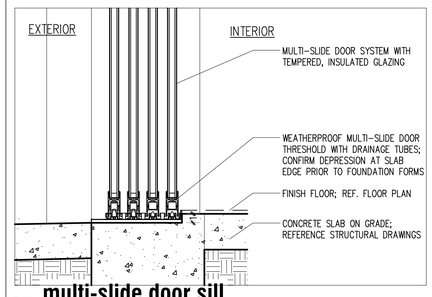

25 multi-slide door sill
SCALE: 1-1/2" = 1'-0"

a6.0

details
1-1/2"=1'-0"

heliotrope duplex

407 heliotrope avenue
corona del mar, california
92625

LICENSED ARCHITECT
ERIC D. AUST
C-29374
31 MAY 2025
RENEWAL DATE
STATE OF CALIFORNIA

0 3" 6" 1' 2'

22 may 2023
© copyright 2023
job #2117

eric aust architect
62 balboa coves
newport beach, california 92663
tel 949.637.5220

client:
JRC real estate development
14930 alondra blvd.
la mirada, california 90638
tel 562.623.9328

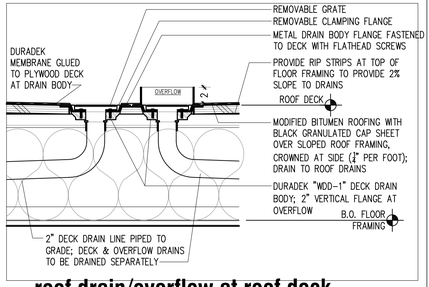

26 roof drain/overflow at roof deck
SCALE: 1-1/2" = 1'-0"

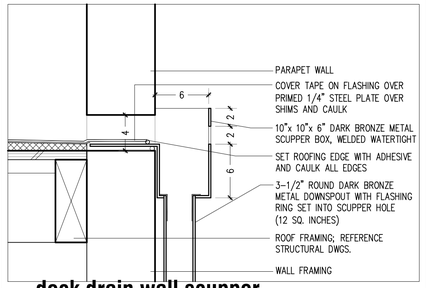

27 deck drain wall scupper
SCALE: 1-1/2" = 1'-0"

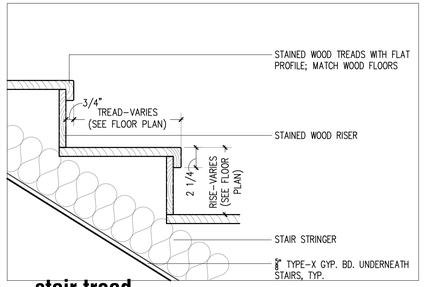

28 stair tread
SCALE: 1-1/2" = 1'-0"

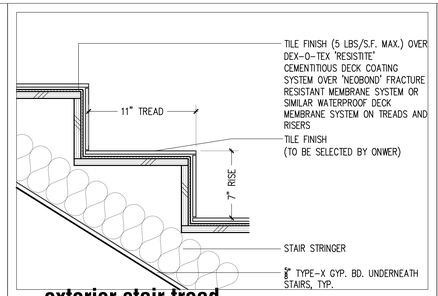

29 exterior stair tread
SCALE: 1-1/2" = 1'-0"

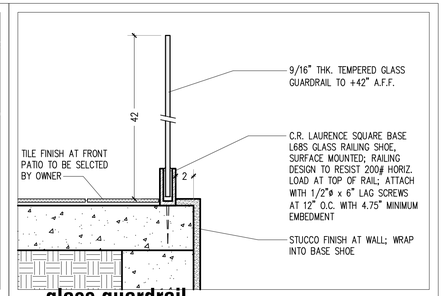

30 glass guardrail
SCALE: 1-1/2" = 1'-0"

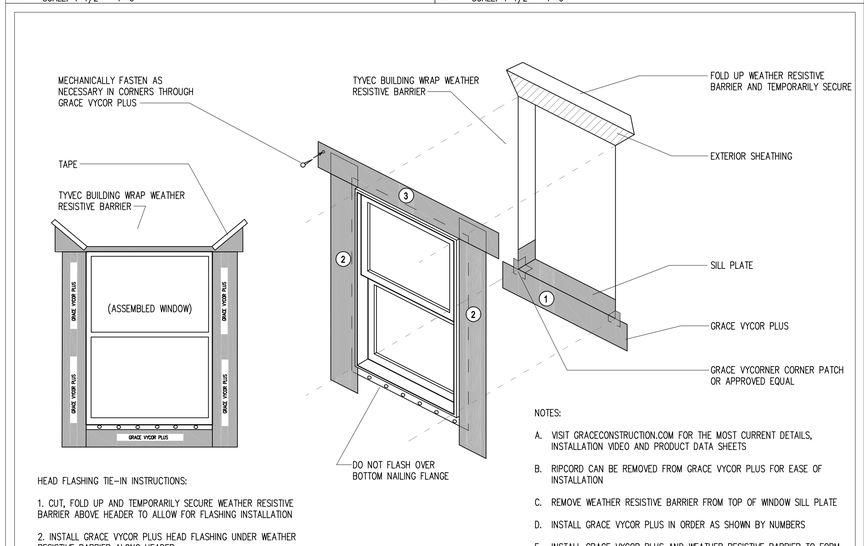

34 window waterproofing detals
NOT TO SCALE

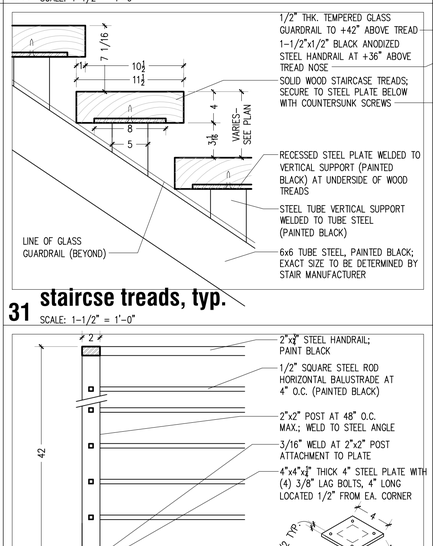

31 staircse treads, typ.
SCALE: 1-1/2" = 1'-0"

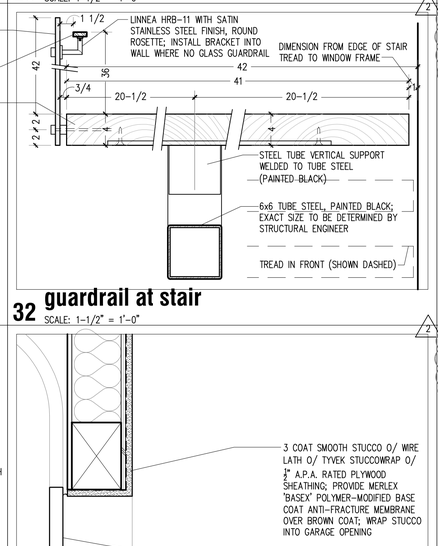

32 guardrail at stair
SCALE: 1-1/2" = 1'-0"

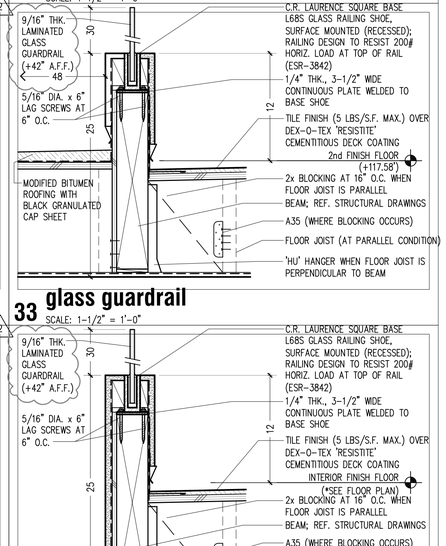

33 glass guardrail
SCALE: 1-1/2" = 1'-0"

38 recessed baseboard, typ.
SCALE: 1-1/2" = 1'-0"

39 box beam at ceiling
SCALE: 1-1/2" = 1'-0"

40 window head/sill at stone veneer
SCALE: 1-1/2" = 1'-0"

41 roof deck to wall flashing
SCALE: 1-1/2" = 1'-0"

42 wood trellis
SCALE: 1-1/2" = 1'-0"

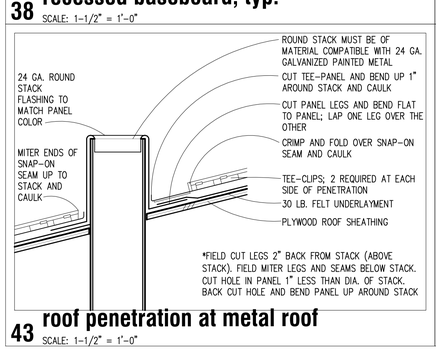

43 roof penetration at metal roof
SCALE: 1-1/2" = 1'-0"

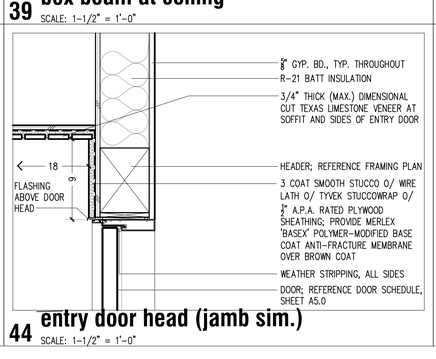

44 entry door head (jamb sim.)
SCALE: 1-1/2" = 1'-0"

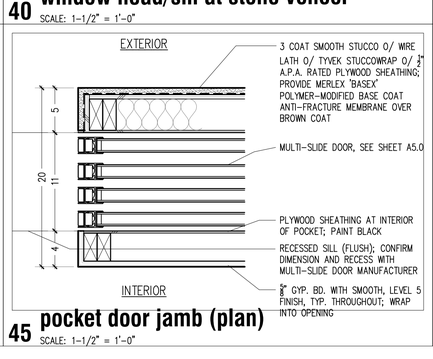

45 pocket door jamb (plan)
SCALE: 1-1/2" = 1'-0"

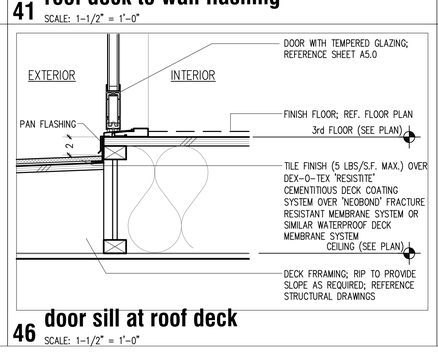

36 garage door head (jamb sim.)
SCALE: 1-1/2" = 1'-0"

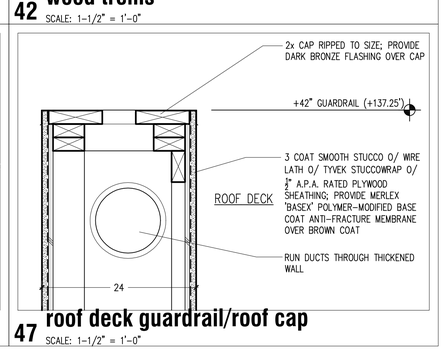

46 door sill at roof deck
SCALE: 1-1/2" = 1'-0"

47 roof deck guardrail/roof cap
SCALE: 1-1/2" = 1'-0"

a6.1

details
1-1/2"=1'-0"

heliotrope duplex

407 heliotrope avenue
corona del mar, california
92625

1 CITY CORRECTIONS 14 SEPTEMBER 2023
2 CITY CORRECTIONS 08 DECEMBER 2023

LICENSED ARCHITECT
ERIC D AUST
C-29374
31 MAY 2025
RENEWAL DATE
STATE OF CALIFORNIA

0 3" 6" 1' 2'

22 may 2023
© copyright 2023
job #2117

eric aust
architect
62 balboa coves
newport beach, california 92663
tel 949.637.5220

client:
JRC real estate development
14930 alondra blvd.
la mirada, california 90638
tel 562.623.9328

GA FILE NO. WP 3242	GENERIC	1 HOUR FIRE	50 to 54 STC SOUND

GYPSUM WALLBOARD, RESILIENT CHANNELS, MINERAL OR GLASS FIBER INSULATION, WOOD STUDS

Resilient channels 16" o.c. attached at right angles to ONE SIDE of 2 x 4 wood studs 24" o.c. with 1-1/4" Type S drywall screws. One layer 5/8" type X gypsum wallboard or gypsum veneer base applied at right angles to channels with 1" Type S drywall screws 8" o.c. with vertical joints located midway between studs. 3" mineral or glass fiber insulation in stud space.

OPPOSITE SIDE: One layer 5/8" type X gypsum wallboard or gypsum veneer base applied parallel or at right angles to studs with 6d cement coated nails, 1-7/8" long, 0.0915" shank, 15/64" heads, 7" o.c.

Vertical joints staggered 24" on opposite sides. **(LOAD-BEARING)**

Thickness: 5-3/8"
Approx. Weight: 7 psf
Fire Test: Based on UL R14196, 05NK05371, 2-15-08, UL Design U309
Sound Test: NRCC TL-93-098, IRC-IR-761, 3-98

48 1-hour partition
SCALE: 1-1/2" = 1'-0"

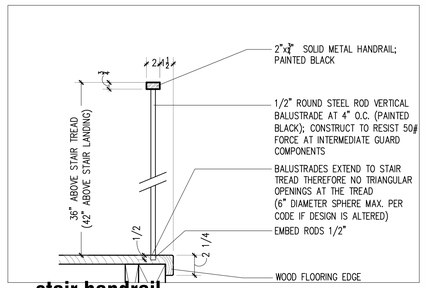

49 stair handrail
SCALE: 1-1/2" = 1'-0"

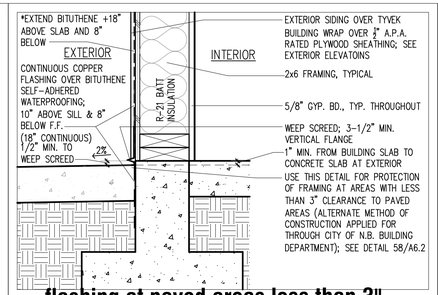

50 flashing at paved areas less than 3"
SCALE: 1-1/2" = 1'-0"

51 not used
SCALE: 1-1/2" = 1'-0"

52 not used
SCALE: 3" = 1'-0"

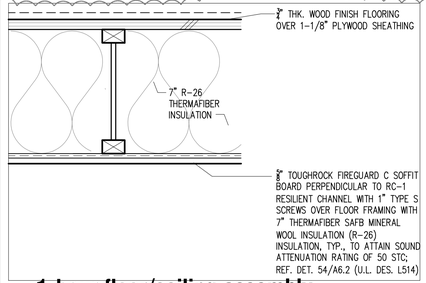

53 1-hour floor/ceiling assembly
SCALE: 1-1/2" = 1'-0"

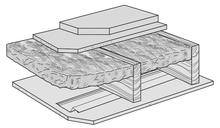

51 STC/46 IIC*
1-hr. ceiling—single-layer, resilient channel—3" THERMAFIBER SAFB between joists—1/2" gypsum wallboard Type C core—1-1/4" nom wd sub & fin flr—2 x 10 wd joist 16" o.c.—RC-1 channel or equivalent att to joists—panels att with 1" TYPE S screws—joints fin—est fire rating based on—**UL Des L514—CK-6512-9**

GA FILE NO. FC 5120	GENERIC	1 HOUR FIRE	50 to 54 STC SOUND

WOOD JOISTS, GYPSUM WALLBOARD, RESILIENT CHANNELS, GLASS FIBER INSULATION

One layer 1/2" type X gypsum wallboard or gypsum veneer base applied at right angles to resilient channels 24" o.c. with 1" Type S drywall screws 8" o.c. at ends and 12" o.c. at intermediate furring channels. Gypsum board end joints located midway between continuous channels and attached to additional pieces of channel 64" long with screws 8" o.c. Resilient channels applied at right angles to 2 x 10 wood joists 16" o.c. with 6d coated nails, 1-7/8" long, 0.095" shank, 1/4" heads, two per joist. Wood joists supporting 5/8" interior plywood with exterior glue subfloor and 3/8" particle board, 1.5 psf. 3-1/2" glass fiber insulation batts, 0.7 pcf, friction fit in joist cavities supported alternately every 12" by wire rods and resilient channels.

Sound tested with carpet and pad and with insulation stapled to joists.

Approx. Ceiling Weight: 2 psf
Fire Test: FM FC-181, 8-31-72
Sound Test: G&H OC-3MT, 10-13-71
IIC & Test: (73 C & P)
G&H OC-3MT, 10-13-71

54 1-hour floor/ceiling assembly (51 STC)
SCALE: 1-1/2" = 1'-0"

56 not used
SCALE: 1-1/2" = 1'-0"

57 not used
SCALE: 1-1/2" = 1'-0"

CITY OF NEWPORT BEACH
COMMUNITY DEVELOPMENT DEPARTMENT
BUILDING DIVISION
100 Civic Center Drive | P.O. Box 1768 | Newport Beach, CA 92658-8915
www.newportbeachca.gov | (949) 644-3200

RECEIVED BY COMMUNITY DEVELOPMENT
AUG 18 2023
CITY OF NEWPORT BEACH

CASE NO.: 2023-74

☐ REQUEST FOR MODIFICATION TO PROVISIONS OF TITLE 9 (FIRE CODE) OR TITLE 15 (BUILDING CODE) OF THE NEWPORT BEACH MUNICIPAL CODE (See Reverse for Basis for Approval) (Fee $291)

☒ REQUEST FOR ALTERNATE MATERIAL OR METHOD OF CONSTRUCTION (See Reverse for Basis for Approval) (Fee $291) $306

☐ REQUEST FOR EXEMPTION FROM DISABLED ACCESS DUE TO PHYSICAL OR LEGAL CONSTRAINT (Fee $1,692)

(Ratification by the Board of Appeals will be required.)

For above requests, complete Sections 1, 2 & 3 below by printing in ink or typing.

FOR STAFF USE ONLY
Plan Check # PC2023-1372 # of Stories 3
Occupancy Classification R-3
Use of Building DUPLEX # of Units 2
Project Status UNDER PLAN CHECK
Construction Type VB - SPRINKLERED
Verified by 22
No. of Items 1
Fee due $306.
DISTRIBUTION:
☐ Owner ☒ Plan Check AEC.
☒ Petitioner ☐ Inspector
☐ Fire ☐ Other

1 JOB ADDRESS:
SITE ADDRESS: 407 Heliotrope Avenue
Owner JRC Real Estate Development
Address 14930 Alondra Blvd.
La Mirada, CA Zip 90638
Daytime Phone (562) 623.9328

PETITIONER ADDRESS:
Petitioner Eric Aust (Architect)
(Petitioner to be architect or engineer)
Address 62 Balboa Coves
Newport Beach, CA Zip 92663
Daytime Phone (949) 637-5220

2 REQUEST: Submit plans if necessary to illustrate request. Additional sheets or data may be attached.
Alternative weep screed/waterproofing method for exterior walls per detail 50/a6.2
Application of a continuous waterproofing membrane 10" above sill (+107.00') and 8" below finish slab plus a protective layer of copper flashing submitted under plan check #2023-1312

3 JUSTIFICATION/FINDINGS OF EQUIVALENCY:
We are providing continuous flashing over bituthene in order to protect the framing and structure in case of flooding or wet conditions; Proposed detail is an often applied, real-world solution that includes waterproofing in excess of the building code minimums in an effort to protect against water intrusion and potential future hardscape improvements that would be non-compliant.

CODE SECTIONS: R317.1

Petitioner's Signature E. D. Aust Position Architect
CA Professional Lic. # C-29374 Date 17 August 2023

FOR STAFF USE ONLY

DEPARTMENT ACTION: In accordance with: ☒ CBC 104.11/CFC 104.9 (Alternate materials & methods) ☐ CBC 104.10/CFC 104.8 (CBC Modification)

☐ Concurrence from Fire Code Official is required. ☐ **Approved** ☐ **Disapproved** ☐ Written Comments Attached

By: _____ Date _____

☒ Request (DOES) (DOES NOT) lessen any fire protection requirements.
☒ Request (DOES) (DOES NOT) lessen the structural integrity

The Request is ☒ **Granted** ☐ **Granted (Ratification required)** ☐ **Denied (See reverse for appeal information)**

Conditions of Approval:

Signature _____ Position CHIEF BUILDING OFFICIAL Date 08-25-2023
Print Name TONEE TRAT

APPEAL OF DIVISION ACTION TO THE BUILDING BOARD OF APPEALS (See Reverse)
(Signature, statement of owner or applicant, statement of reasons for appeal and filing fees are required.)

CASHIER RECEIPT NUMBER: REC-016076-2023 Forms\modif 12/17/19

58 alternate method of construction - approval
SCALE: 1-1/2" = 1'-0"

59 approval
SCALE: 1-1/2" = 1'-0"

CITY OF NEWPORT BEACH CALIFORNIA

NOTICE REGARDING CONDOMINIUMS

The undersigned (hereinafter "Owner") hereby certify(ies) that (I am) (we are) the owner(s) of the real property located in the City of Newport Beach, County of Orange, State of California, described as follows:

A portion of lot 7 and a portion of lot 9, block 334, Corona Del Mar

APN 459-172-14

Job Address: 407 Heliotrope Avenue

Owner acknowledges that a Parcel Map for condominium purposes has not been approved and recorded; therefore, condominiums are not currently permitted. Condominiums are defined as a *form of property ownership providing for individual ownership of space in a structure together with an individual interest in the land or other parts of the structure in common with other owners. Includes a condominium project, community apartment project, or stock cooperative, as defined in California Civil Code § 1351.*

Should Owner pursue the approval of a Parcel Map for condominium purposes, Owner acknowledges and understands the application is a discretionary process and approval is not guaranteed. Furthermore, if the map is approved, Owner acknowledges that the approval may include conditions of approval that require dedication of land, public right-of-way improvements, independent utility services and fire sprinkler risers for each condominium unit, payment of in-lieu park fees, and other requirements applicable to construction of condominiums.

Owner's Signature _____ Date 05 December 2023

Print or Type Name Chris Hyun

Owner's Signature _____ Date _____

Print or Type Name _____

F:\Users\CDD\Shared\Admin\Planning_Division\Applications\CC\OwnerAcknowledgement Rev 04/16/19

60 notice regarding condominiums
SCALE: 1-1/2" = 1'-0"

a6.2

details
1-1/2"=1'-0"

heliotrope duplex

407 heliotrope avenue
corona del mar, california
92625

1 CITY CORRECTIONS 14 SEPTEMBER 2023
2 CITY CORRECTIONS 08 DECEMBER 2023

LICENSED ARCHITECT
ERIC D. AUST
C-29374
31 MAY 2025
RENEWAL DATE
STATE OF CALIFORNIA

0 3" 6" 1' 2'

22 may 2023
© copyright 2023
job #2117

eric aust
architect
62 balboa coves
newport beach, california 92663
tel 949.637.5220

client:
JRC real estate development
14930 alondra blvd.
la mirada, california 90638
tel 562.623.9328

GENERAL STRUCTURAL NOTES

A. GENERAL

1. THESE DRAWINGS HAVE BEEN PREPARED USING STANDARDS OF PROFESSIONAL CARE AND COMPLETENESS NORMALLY EXERCISED UNDER SIMILAR CIRCUMSTANCES BY REPUTABLE STRUCTURAL ENGINEERS IN THIS OR SIMILAR LOCALITIES. THEY ASSUME THAT THE WORK DEPICTED WILL BE PERFORMED BY AN EXPERIENCED CONTRACTOR AND/OR WORKMEN WHO HAVE A WORKING KNOWLEDGE OF THE APPLICABLE CODE STANDARDS AND REQUIREMENTS AND OF INDUSTRY ACCEPTED STANDARD GOOD PRACTICE. AS NOT EVERY CONDITION OR ELEMENT IS (OR CAN BE) EXPLICITLY SHOWN ON THESE DRAWINGS, THE CONTRACTOR SHALL USE INDUSTRY ACCEPTED STANDARD GOOD PRACTICE FOR MISCELLANEOUS WORK NOT EXPLICITLY SHOWN.
2. THESE DRAWINGS REPRESENT THE FINISHED STRUCTURE. THEY DO NOT INDICATE THE METHOD OF CONSTRUCTION. THE CONTRACTOR SHALL BE SOLELY RESPONSIBLE FOR CONSTRUCTION MEANS, METHODS, TECHNIQUES, SEQUENCES, PROCEDURES, LAGGING, SHORING, BRACING, FORM-WORK, ETC. AS REQUIRED FOR THE PROTECTION OF LIFE AND PROPERTY DURING CONSTRUCTION. CONSTRUCTION MATERIALS SHALL BE UNIFORMLY SPREAD OUT SUCH THAT DESIGN LIVE LOAD PER SQUARE FOOT AS NOTED HEREIN IS NOT EXCEEDED.
3. DESIGN OF ITEMS NOT PART OF THE PRIMARY STRUCTURAL SYSTEM (SUCH AS STAIRS, RAILINGS, NON-STRUCTURAL WALLS) AND PREFABRICATED STRUCTURAL ITEMS (SUCH AS FLOOR, ROOF TRUSSES) SHALL BE PROVIDED BY OTHERS UNLESS SPECIFICALLY NOTED ON THESE DRAWINGS. REFER TO SUBMITTALS SECTION FOR ITEMS THAT MUST BE SUBMITTED FOR REVIEW AND FOR SUBMITTAL REQUIREMENTS.
4. THE CONTRACTOR SHALL VERIFY ALL DIMENSIONS, CONDITIONS AND ELEVATIONS WITH ARCH'L. DRAWINGS AND RESOLVE ANY DISCREPANCIES WITH THE ARCHITECT PRIOR TO START OF CONSTRUCTION. CONTRACTOR SHALL ESTABLISH AND VERIFY ALL OPENINGS AND INSERTS FOR ARCH'L., MECH., PLUMBING AND ELECTRICAL WITH APPROPRIATE TRADES, DRAWINGS AND SUBCONTRACTORS PRIOR TO CONSTRUCTION.
5. TYPICAL DETAILS AND NOTES SHALL APPLY, THOUGH NOT NECESSARILY INDICATED AT A SPECIFIC LOCATION ON PLANS. WHERE NO DETAILS ARE SHOWN, CONSTRUCTION SHALL CONFORM TO SIMILAR WORK ON THE PROJECT. DETAILS MAY SHOW ONLY ONE SIDE OF CONNECTION OR MAY OMIT INFORMATION FOR CLARITY.
6. NOTES AND DETAILS ON DRAWINGS SHALL TAKE PRECEDENCE OVER GENERAL STRUCTURAL NOTES AND TYPICAL DETAILS.
7. STANDARDS AND CODE REFERENCES NOTED IN THESE CONSTRUCTION DOCUMENTS REFER TO THE EDITIONS ADOPTED BY THE BUILDING CODE SPECIFIED IN THE BASIS FOR DESIGN. REFERENCES NOT SPECIFICALLY ADOPTED BY SAID BUILDING CODE REFER TO THE LATEST EDITION.
8. ALL INSPECTIONS REQUIRED BY THE BUILDING CODES, JURISDICTION, OR THESE PLANS SHALL BE PROVIDED BY AN INDEPENDENT INSPECTION COMPANY OR THE BUILDING DEPARTMENT. SITE VISITS BY THE ENGINEER DO NOT CONSTITUTE AN INSPECTION.

B. BASIS FOR DESIGN

1. BUILDING CODE: 2022 EDITION OF THE CALIFORNIA BUILDING CODE
2. ROOF LOADS: DEAD LOAD: 16.5 PSF (INCLUDING 5 PSF SOLAR) — LIVE LOAD (REDUCIBLE): 20 PSF
3. FLOOR LOADS: DEAD LOAD: 16 PSF TYPICAL FLOOR, 36 PSF DECKS — LIVE LOADS (REDUCIBLE): 40 PSF TYPICAL FLOOR, 60 PSF DECKS, 100 PSF STAIR
4. WIND LOADS: 95 MPH BASIC WIND SPEED (Vasd = 74 MPH)
   EXPOSURE C
   INTERNAL PRESSURE COEFFICIENT (GCpi) = 0.18
   COMPONENT AND CLADDING WIND PRESSURE PER ASCE7-16
5. SEISMIC LOADS: SITE CLASS D (DEFAULT)
   SEISMIC DESIGN CATEGORY D
   R = 6.5 AND 3.5
   SS = 1.358
   S1 = 0.481
   SDS = 1.086
   SD1 = 0.615 (revision 1)
   Ω = 3.0
   SYSTEM: LIGHT-FRAMED WOOD SHEAR WALLS AND ORDINARY STEEL MOMENT FRAME
   ANALYSIS: EQUIVALENT LATERAL FORCE PROCEDURE
   BASE SHEAR, V = CsW = 0.167 W
6. SNOW LOADS: NONE
7. RAIN INTENSITY: 1 1/2"/HR (BASED ON 100-YR RAIN CYCLE)

C. FOUNDATION

1. FOUNDATIONS DESIGNED PER RECOMMENDATIONS BY R MCCARTHY CONSULTING, INC., REPORT NO. R1-8677, DATED MAY 5, 2022. SITE PREPARATION, GRADING, TESTS, INSPECTIONS, FIELD OBSERVATIONS, OR APPROVAL FROM THE GEOTECHNICAL ENGINEER RECOMMENDED BY THE GEOTECHNICAL REPORT AND ANY ADDENDA SHALL BE COMPLETED PRIOR TO CONSTRUCTION OF FOUNDATIONS.
2. ALLOWABLE DEAD PLUS LIVE LOAD SOIL PRESSURE = 1800 PSF.
3. FOOTING EXCAVATIONS SHALL BE CLEAN AND FREE FROM LOOSE DEBRIS, STANDING WATER, OR UNCOMPACTED MATERIAL AT TIME OF CONCRETE PLACEMENT.
4. TRENCHES AND EXCAVATIONS UNDER OR ADJACENT TO FOUNDATIONS SHALL BE PROPERLY BACKFILLED AND COMPACTED.
5. REFER TO GEOTECHNICAL REPORT FOR ON-SITE SOIL CORROSION POTENTIAL ON METAL CONSTRUCTION MATERIALS. CONSULT A QUALIFIED CORROSION ENGINEER FOR RECOMMENDATIONS FOR MITIGATING CORROSIVE EFFECTS, IF NECESSARY.
6. WATER PROOFING AS MAY BE REQUIRED AT SOIL FACE OF WALLS BELOW GRADE SHALL BE BY OTHERS.

D. CONCRETE

1. ALL CONCRETE CONSTRUCTION SHALL BE PERFORMED IN ACCORDANCE WITH ACI 318 AND ACI 301, EXCEPT AS MODIFIED BY THE CONSTRUCTION DOCUMENTS.
2. MIN. 28 DAY COMPRESSIVE STRENGTH, f'c, SHALL BE 4000 PSI FOR ALL CONCRETE IN CONTACT WITH SOIL. MAX. WATER-CEMENT RATIO SHALL BE 0.5.
3. CONCRETE MIXES SHALL BE DESIGNED BY A CERTIFIED LABORATORY, STAMPED BY AN APPROPRIATELY LICENSED SPECIALTY ENGINEER, AND APPROVED BY THE ENGINEER OF RECORD. MIX DESIGNS SHALL INCLUDE THE PROJECT NAME AND INDICATE THEIR USE WITHIN THE STRUCTURE. MIX DESIGNS SHALL BE PROPORTIONED TO MINIMIZE SHRINKAGE AND HAVE PROVEN SHRINKAGE CHARACTERISTICS OF 0. 05% OR LESS BASED ON TESTING PER ASTM C157.
4. IF USED, EARLY STRENGTH CONCRETE SHALL BE PROPORTIONED TO DEVELOP THE 28 DAY COMPRESSIVE STRENGTH AT THE AGE REQUIRED BY THE CONTRACTOR. CONTRACTOR SHALL SUBMIT TEST DATA FOR REVIEW BY THE STRUCTURAL ENGINEER TO SUBSTANTIATE THE CONCRETE STRENGTH AT THE REQUIRED AGE.
5. ALL CONCRETE SHALL BE NORMAL WEIGHT OF 145 POUNDS PER CUBIC FOOT USING HARD ROCK AGGREGATES CONFORMING TO ASTM C33 U.N.O. THE AGGREGATE IN THE CONCRETE SHALL BE WELL GRADED. THE NOMINAL MAXIMUM SIZE OF THE COARSE AGGREGATE SHALL BE 1 1/2" FOR SLABS ON GRADE (1 1/2" MIX) AND 3/4" OR LESS FOR ALL OTHER CONCRETE, U.N.O.
6. MAX. SLUMP SHALL BE 5 INCHES (EXCEPTION: WHERE ADMIXTURES/PLASTICIZERS HAVE BEEN INCLUDED IN MIX DESIGN TO IMPROVE WORKABILITY, SLUMP LIMIT SHALL BE BASED ON ADMIXTURE MFR.'S RECOMMENDATIONS). MIX WATER SHALL BE CLEAN AND POTABLE.
7. PORTLAND CEMENT SHALL CONFORM TO ASTM C150. TYPE V CEMENT SHALL BE USED FOR CONCRETE IN CONTACT WITH EARTH. TYPE II CEMENT MAY BE USED ELSEWHERE. CEMENT SHALL BE TYPE V WITH POZZOLAN WHERE CONCRETE IS IN CONTACT WITH SOIL CONTAINING VERY SEVERE SULFATE EXPOSURE.

D. CONCRETE (CONT'D.)

8. FLY ASH MAY BE USED IN CONCRETE, SUBJECT TO APPROVAL BY THE ARCHITECT, PROVIDED THE FOLLOWING CONDITIONS ARE MET:

8.1. FLY ASH SHALL COMPLY WITH ASTM C618.

8.2. CEMENT CONTENT SHALL BE REDUCED A MINIMUM OF 15 PERCENT UP TO A MAXIMUM OF 25 PERCENT WHEN COMPARED TO AN EQUIVALENT CONCRETE MIX DESIGN WITHOUT FLY ASH. FLY ASH CONTENT SHALL NOT COMPRISE MORE THAN 35 PERCENT OF THE TOTAL CEMENTITIOUS CONTENT. THE WATER-CEMENT RATIO SHALL BE CALCULATED BASED ON THE TOTAL CEMENTITIOUS MATERIAL IN THE MIX.

8.3. CLASS F FLY ASH SHALL BE USED IN SULFATE RESISTANT CONCRETE WITH f'c EQUAL TO OR GREATER THAN 4000 PSI. CLASS C FLY ASH MAY BE USED ELSEWHERE.

9. WATER SOLUBLE CHLORIDE ION CONCENTRATIONS IN CONCRETE SHALL BE LIMITED PER ACI 318, SECTION 19.3.2.1, EXPOSURE CLASS "C1".
10. TIME BETWEEN CONCRETE BATCHING AND PLACEMENT SHALL BE IN ACCORDANCE WITH ASTM C94.
11. CONCRETE MIXING, PLACEMENT AND QUALITY SHALL BE PER ACI 318. SYSTEMATICALLY MECHANICALLY VIBRATE ALL CONCRETE WHEN PLACED. SLABS ON GRADE NEED BE VIBRATED ONLY AROUND AND UNDER FLOOR DUCTS OR SIMILAR ELEMENTS. REMOVE ALL DEBRIS FROM FORMS BEFORE PLACING CONCRETE. CONCRETE SHALL NOT BE DROPPED THROUGH REINFORCING STEEL SO AS TO CAUSE SEGREGATION OF AGGREGATES. UNCONFINED FALL OF CONCRETE SHALL NOT EXCEED 5 FEET.
12. PROTECT CONCRETE FROM DAMAGE OR REDUCED STRENGTH DUE TO COLD OR HOT WEATHER IN ACCORDANCE WITH ACI 305 AND 306. CONTRACTOR SHALL TAKE SPECIAL CURING PRECAUTIONS TO MINIMIZE SHRINKAGE CRACKING OF CONCRETE SLABS.
13. ALL ITEMS TO BE CAST IN CONCRETE SUCH AS REINFORCEMENT, DOWELS, BOLTS, ANCHORS, SLEEVES, ETC., SHALL BE SECURELY POSITIONED IN THE FORMS.
14. MECH., ELECT., AND PLUMBING PENETRATIONS / EMBEDDED CONDUITS SHALL COMPLY WITH THE FOLLOWING:

14.1. ELECTRICAL CONDUITS MAY BE EMBEDDED IN STRUCTURAL CONCRETE ONLY AS NOTED IN TYPICAL DETAILS FOR WALLS AND CAST-IN-PLACE ELEVATED SLABS (EMBEDDED CONDUITS IN CONCRETE OVER STEEL DECK ARE NOT PERMITTED) OR WHERE SPECIFICALLY APPROVED IN WRITING BY THE ENGINEER. PIPING SHALL NOT BE EMBEDDED IN STRUCTURAL CONCRETE U.N.O. EMBEDDED ITEMS SHALL NOT IMPAIR THE STRENGTH OF THE MEMBER.

14.2. REFER TO TYPICAL DETAILS FOR ACCEPTABLE CONDUIT, PIPING, AND DUCT PENETRATIONS THRU SLABS AND WALLS. DO NOT CUT ANY REINF. THAT MAY INTERFERE WITH PERMITTED PENETRATIONS. OPENINGS SHALL NOT BE CORED WITHOUT PRIOR WRITTEN APPROVAL OF ENGINEER THRU THE ARCHITECT. PENETRATIONS THRU BEAMS AND COLUMNS ARE PERMITTED ONLY WHERE SPECIFICALLY DETAILED.

14.3. CONTRACTOR SHALL SUBMIT SHOP DRAWING SHOWING SIZES AND DIMENSIONED LOCATIONS OF ALL PENETRATIONS AND EMBEDDED CONDUITS IN WALLS AND ELEVATED SLABS. SHOP DRAWING MUST BE APPROVED BY ENGINEER PRIOR TO CONCRETE PLACEMENT. PENETRATIONS AND EMBEDDED CONDUITS NOT SHOWN ON APPROVED SHOP DRAWING WILL NOT BE PERMITTED UNLESS SPECIFICALLY APPROVED IN WRITING BY THE ENGINEER.

15. CONSTRUCTION JOINT SURFACES SHALL BE CLEANED AND LAITANCE REMOVED. HORIZONTAL JOINT SURFACES SHALL BE ROUGHENED TO 1/4" AMPLITUDE. THOROUGHLY WET ALL JOINT SURFACES AND REMOVE STANDING WATER IMMEDIATELY PRIOR TO NEW CONCRETE PLACEMENT.
16. CONCRETE SHALL BE CURED IN ACCORDANCE WITH ACI 318, SECTION 26.5.3.2, UNLESS ALTERNATE METHODS HAVE BEEN APPROVED BY THE ARCHITECT AND ENGINEER. WHERE CURING COMPOUNDS HAVE BEEN APPROVED FOR SLAB CURING, CONTRACTOR SHALL BE RESPONSIBLE FOR VERIFYING COMPATIBILITY OF COMPOUNDS WITH ANTICIPATED FLOOR FINISH (e.g., RESILIENT TILE) PRIOR TO CURING COMPOUND APPLICATION.
17. GROUT BENEATH COLUMN BASES OR BEARING PLATES SHALL BE 5000 PSI (MIN.) NON-SHRINK FLOWABLE GROUT. INSTALL GROUT BENEATH BEARING PLATES BEFORE FRAMING MEMBER IS INSTALLED. AT COLUMNS, INSTALL GROUT BENEATH BASE PLATES AFTER COLUMN HAS BEEN PLUMBED. FRAMING (NOT INCLUDING CONCRETE OVER STEEL DECK OR CONCRETE TOPPING AS OCCURS) MAY BE INSTALLED ONE LEVEL ABOVE BASE PLATE PRIOR TO PLACING GROUT BENEATH BASE PLATES. GROUT SHALL BE PLACED BENEATH BASE PLATES PRIOR TO INSTALLATION OF ANY FRAMING TWO OR MORE LEVELS ABOVE BASE PLATE. GROUT DEPTH SHALL BE 1 1/2" TYPICAL, OR SHALL BE SUFFICIENT TO ALLOW GROUT OR DRYPACK TO BE PLACED BENEATH PLATE WITHOUT VOIDS.

E. MASONRY

1. ALL MASONRY CONSTRUCTION SHALL BE PERFORMED IN ACCORDANCE WITH CBC 2104 AND ACI 530.1.
2. MASONRY COMPRESSIVE STRENGTH, f'm, SHALL BE 2000 PSI U.N.O. 28 DAY COMPRESSIVE STRENGTHS OF INDIVIDUAL COMPONENTS (i.e., BLOCK, GROUT, AND MORTAR) SHALL BE AS NOTED BELOW. BLOCK STRENGTH SPECIFIED IS BASED ON NET AREA. ALTERNATIVELY, STRENGTHS OTHER THAN THOSE LISTED BELOW MAY BE USED IF THE COMBINED SYSTEM ACHIEVES SPECIFIED VALUE OF f'm, AND MASONRY COMPRESSIVE STRENGTH IS VERIFIED BY THE PRISM TEST METHOD IN ACCORDANCE WITH ASTM C1314.

f'm:	BLOCK:	GROUT:	MORTAR:	MORTAR TYPE:
2000 PSI	2000 PSI	2000 PSI	2000 PSI	TYPE S
2500 PSI	3250 PSI	2500 PSI	2500 PSI	TYPE M

3. STRUCTURAL MASONRY SHALL BE HOLLOW, MEDIUM WEIGHT (115 PCF), LOAD-BEARING CONCRETE MASONRY UNITS CONFORMING TO ASTM C90. BLOCK TEST DATA BY A CERTIFIED LABORATORY SHALL BE SUBMITTED FOR REVIEW. ALL BLOCKS SHALL BE PLACED IN RUNNING BOND CONSTRUCTION U.N.O. WITH ALL VERTICAL CELLS IN ALIGNMENT.
4. GROUT SHALL CONFORM TO REQUIREMENTS OF CBC 2103.3. USE SUFFICIENT WATER FOR GROUT TO FLOW INTO ALL JOINTS OF THE MASONRY WITHOUT SEGREGATION. ONLY SOLID GROUT CELLS WITH REINFORCING UNLESS REQUIREMENT TO SOLID GROUT ENTIRE WALL IS SPECIFICALLY NOTED ON PLANS OR SCHEDULE. HOLD GROUT DOWN 1-1/2" BELOW TOP OF BLOCK AT GROUT LIFT JOINTS.
5. MORTAR MIX SHALL CONFORM TO REQUIREMENTS OF CBC 2103.2. SEE TABLE ABOVE FOR MORTAR TYPE. MORTAR THICKNESS SHALL NOT EXCEED 5/8 INCH.
6. GROUT AND MORTAR MIXES SHALL BE DESIGNED BY A CERTIFIED LABORATORY, STAMPED BY AN APPROPRIATELY LICENSED SPECIALTY ENGINEER, AND APPROVED BY THE ENGINEER OF RECORD. MIX DESIGNS SHALL INCLUDE THE PROJECT NAME AND INDICATE THEIR USE WITHIN THE STRUCTURE.
7. LAP REINFORCING BARS PER TYPICAL REBAR LAP SCHEDULE (MASONRY) U.N.O.
8. REINFORCING SHALL BE SECURED IN ITS PROPER POSITION WITHIN THE CELL TO PREVENT LATERAL DISPLACEMENT PRIOR TO GROUTING BY WIRE POSITIONERS OR OTHER SUITABLE DEVICES AT INTERVALS NOT EXCEEDING 10'-0" o.c. MAX.
9. MIN. WALL VERT. REINF., U.N.O. ON PLANS OR DETAILS, SHALL BE #5 BAR VERT. FULL HEIGHT IN CENTER OF GROUTED CELL AT ALL WALL INTERSECTIONS, CORNERS, WALL ENDS, JAMBS AT WALL OPENINGS, AND AT EACH SIDE OF CONTROL JOINTS. REFER TO PLAN FOR TYPICAL WALL VERT. REINF. SIZE AND SPACING. DOWEL ALL VERT. REINF. TO FOUNDATION WITH DOWELS TO MATCH AND LAP VERT. REINF.

E. MASONRY (CONT'D.)

10. MIN. WALL HORIZ. REINF., U.N.O. ON PLANS OR DETAILS, SHALL BE (2) #5 BARS IN CENTER OF 32" DEEP (MIN.) CONTINUOUS GROUTED BOND BEAM AT ELEVATED FLOOR AND ROOF LINES AND SINGLE #5 BAR IN CENTER OF 16" DEEP CONTINUOUS GROUTED BOND BEAM AT TOP OF PARAPET OR FREE STANDING WALL AND AT INTERVALS NOT TO EXCEED 48" o.c. PLACE BARS AT ELEVATED FLOOR AND ROOF LINES CONTINUOUS THROUGH CONTROL JOINTS. PROVIDE BENT BARS PER TYPICAL DETAILS TO MATCH AND LAP HORIZ. BOND BEAM REINF. AT CORNERS AND WALL INTERSECTIONS TO MAINTAIN BOND BEAM CONTINUITY. USE BOND BEAM UNITS AT HORIZ. REINF.
11. MIN. LINTEL, WHERE NOT NOTED ON PLANS, SHALL HAVE A MIN. OF (2) #5 CONTINUOUS HORIZ. BARS IN BOTTOM OF BOND BEAM OR LINTEL BLOCK AND SHALL BE GROUTED SOLID TO A MIN. DEPTH OF 24". SILLS SHALL BE REINFORCED WITH SINGLE #5 BAR IN BOND BEAM BLOCK GROUTED SOLID TO MIN. DEPTH OF 8". ALL LINTEL OR SILL REINF. AND GROUT SHALL EXTEND 2'-0" MIN. PAST JAMBS U.N.O. ON PLANS OR DETAILS.
12. MECH., ELECT., AND PLUMBING PENETRATIONS THRU MASONRY SHALL COMPLY WITH THE FOLLOWING:

12.1. DO NOT CUT ANY REINF. THAT MAY INTERFERE WITH PENETRATIONS. INSTALL ANY SLEEVES REQUIRED BY MECH., ELECT., OR PLUMBING PRIOR TO GROUTING.

12.2. PENETRATIONS SHALL NOT BE CORED OR CUT INTO MASONRY WITHOUT PRIOR WRITTEN APPROVAL OF ENGINEER THRU THE ARCHITECT.

12.3. PENETRATIONS THRU LINTELS, PILASTERS, AND JAMBS ARE PERMITTED ONLY WHERE SPECIFICALLY DETAILED.

12.4. CONDUIT AND PIPING PARALLEL TO PLANE OF WALL SHALL NOT BE EMBEDDED IN WALL U.N.O.

F. REINFORCING STEEL

1. REINFORCING STEEL SHALL BE DETAILED AND PLACED IN ACCORDANCE WITH CURRENTLY ADOPTED ACI 318 AND CRSI'S MANUAL OF STANDARD PRACTICE.
2. REINFORCING STEEL SHALL CONFORM TO ASTM A615 OR ASTM A706 (A706 REQUIRED FOR ALL REINFORCING TO BE WELDED) AND SHALL BE GRADE 60 (fy = 60 KSI) DEFORMED BARS U.N.O. REINFORCING IN SLABS ON GRADE MAY BE GRADE 40 (fy = 40 KSI) DEFORMED BARS FOR ALL BARS #4 AND SMALLER U.N.O. ON PLANS OR DETAILS.
3. WELDED WIRE FABRIC FLAT SHEETS SHALL CONFORM TO THE REQUIREMENTS OF ASTM A1064. LAPS IN WELDED WIRE FABRIC SHALL BE MADE SUCH THAT THE OVERLAP, MEASURED BETWEEN OUTERMOST CROSS WIRE OF EACH FABRIC SHEET, IS NOT LESS THAN THE SPACING OF CROSS WIRES PLUS 2 INCHES.
4. RECTANGULAR PLATE DOWELS AND SMOOTH ROUND DOWELS USED AT CONTROL AND CONSTRUCTION JOINTS IN SLABS ON GRADE SHALL CONFORM TO ASTM A36. REFER TO TYPICAL CONTROL JOINTS IN SLAB ON GRADE DETAIL FOR SIZE, PLACEMENT, SPACING, ETC. RECTANGULAR PLATE DOWELS SHALL BE BY PNA CONSTRUCTION TECHNOLOGIES (800-542-0214) OR OTHER MFR. APPROVED BY ENGINEER. INSTALL ALL PLATE DOWEL BASKET ASSEMBLIES PER MFR.'S RECOMMENDATIONS.
5. ALL DIMENSIONS SHOWING THE LOCATION OF REINFORCING STEEL NOT NOTED AS "CLEAR" OR "CLR." ARE TO CENTER OF STEEL. CLEAR COVER FOR NON-PRESTRESSED CONCRETE REINFORCING SHALL BE AS NOTED BELOW, U.N.O. ON PLANS OR DETAILS. CLEAR COVER FOR PRESTRESSED CONCRETE AND FOR PRECAST CONCRETE MANUFACTURED UNDER PLANT CONTROL CONDITIONS SHALL BE PER ACI 318, SECTIONS 20.6.1.3.2 AND 20.6.1.3.3, RESPECTIVELY.

EXPOSURE CONDITION:	COVER:
CAST AGAINST AND PERMANENTLY EXPOSED TO EARTH	3"
EXPOSED TO EARTH OR WEATHER (INCLUDING SLABS ON GRADE)	
NO. 5 AND SMALLER	1 1/2"
NO. 6 AND LARGER	2"
NOT EXPOSED TO WEATHER OR IN CONTACT WITH GROUND	
STRUCTURAL SLABS, WALLS, JOISTS	
NO. 11 AND SMALLER	3/4"
NO. 14 AND LARGER	1 1/2"
BEAMS, COLUMNS (PRIMARY REINFORCEMENT, TIES, STIRRUPS, SPIRALS)	1 1/2"

6. LAP SPLICES OF REINFORCING STEEL SHALL CONFORM TO TYPICAL REBAR LAP SCHEDULE U.N.O. NO TACK WELDING OF REINFORCING BARS ALLOWED. LATEST ACI CODE AND DETAILING MANUAL APPLY. AT WALLS AND FOOTINGS, PROVIDE BENT CORNER BARS TO MATCH AND LAP WITH HORIZ. BARS AT ALL CORNERS AND INTERSECTIONS U.N.O. VERT. WALL BARS SHALL BE SPLICED AT OR NEAR FLOOR LINES. SPLICE TOP BARS AT CENTER LINE OF SPAN AND BOTTOM BARS AT THE SUPPORT IN SPANDRELS, BEAMS, GRADE BEAMS, ETC., U.N.O. ON PLANS OR DETAILS.
7. MECHANICAL SPLICE COUPLERS SHALL HAVE CURRENT ICC APPROVAL AND SHALL BE CAPABLE OF DEVELOPING 125% OF THE SPLICED BAR'S YIELD STRENGTH.
8. ALL REINFORCING SHALL BE BENT COLD. BARS SHALL NOT BE UN-BENT AND RE-BENT. FIELD BENDING OF REBAR SHALL NOT BE ALLOWED UNLESS SPECIFICALLY NOTED.
9. WELDING OF REINFORCING BARS, METAL INSERTS, AND CONNECTIONS SHALL BE MADE ONLY AT LOCATIONS SHOWN ON PLANS OR DETAILS. SEE WELDING SECTION OF G.S.N. FOR ADDITIONAL REQUIREMENTS.
10. REINFORCING BAR SPACINGS SHOWN ON PLANS ARE MAX. ON CENTER DIMENSIONS. DOWEL ALL VERT. REINFORCING TO FOUNDATION. SECURELY TIE ALL BARS IN LOCATION BEFORE PLACING CONCRETE. MIN. CLEAR SPACING BETWEEN PARALLEL REINFORCEMENT SHALL BE THE LARGER OF 1-1/2 TIMES NOMINAL BAR DIA. OR 1-1/3 TIMES MAX. AGGREGATE SIZE OR 1-1/2". CLEAR SPACING LIMITATION APPLIES ALSO TO CLEAR DISTANCE BETWEEN A CONTACT LAP SPLICE AND ADJACENT SPLICES OR BARS.

G. STRUCTURAL STEEL

1. STRUCTURAL STEEL MEMBERS SHALL CONFORM TO THE FOLLOWING STANDARDS AND MATERIAL PROPERTIES U.N.O:

SHAPE:	STANDARD:	Fy:
ROLLED WIDE FLANGE SECTIONS	ASTM A992	50 KSI
OTHER STANDARD STEEL SHAPES AND ROLLED SECTIONS	ASTM A36	36 KSI
BARS AND PLATES	ASTM A36	36 KSI
	OR	
	ASTM A572, GRADE 50 (WHERE NOTED)	50 KSI
PIPES	ASTM A53, GRADE B	35 KSI
HSS (RECT.)	ASTM A500, GRADE C OR ASTM A1085	50 KSI
HSS (ROUND)	ASTM A500, GRADE C OR ASTM A1085	46 KSI

2. ASTM A6 HOT-ROLLED SHAPES WITH FLANGE THICKNESS EXCEEDING 2" SHALL BE SUPPLIED WITH CHARPY V-NOTCH TESTING IN ACCORDANCE WITH ASTM A6, SUPPLEMENTARY REQUIREMENT S30. IMPACT TESTS SHALL MEET A MINIMUM AVERAGE TOUGHNESS OF 20 FT-LB AT +70 °F. SPLICES, WELD ACCESS HOLES, COMPATIBLE WELDING PROCEDURES, WELDING PREHEAT REQUIREMENTS, AND THERMAL CUT SURFACE PREPARATION AND INSPECTION SHALL BE MADE IN ACCORDANCE WITH SECTIONS J1.5, J1.6, J2.6, AND M2.2 OF AISC 360. WELD TABS AND BACKING AT SPLICES SHALL BE REMOVED AND THE SURFACES GROUND SMOOTH.
3. ALL STRUCTURAL AND MISC. STEEL SHALL BE FABRICATED AND ERECTED IN ACCORDANCE WITH AISC 303 AND SHALL BE COMPLETED BY AN "APPROVED STEEL FABRICATOR." SHOP DRAWINGS AND ERECTION DRAWINGS SHALL INCLUDE ALL ITEMS AS REQUIRED BY AISC 360, SECTION M1.

G. STRUCTURAL STEEL (CONT'D.)

4. SHEAR CONNECTORS (SUCH AS HEADED STEEL STUDS, STEEL BARS, OR STEEL LUGS), REINFORCING BARS, DEFORMED ANCHORS, OR THREADED STUDS SHALL NOT BE ATTACHED TO THE TOP FLANGES OF BEAMS, JOISTS, OR BEAM ATTACHMENTS SO THAT THEY PROJECT VERTICALLY FROM OR HORIZONTALLY ACROSS THE TOP FLANGE OF THE MEMBER UNTIL AFTER THE METAL DECKING, OR OTHER WALKING/WORKING SURFACE, HAS BEEN INSTALLED.
5. SEE CONCRETE SECTION OF G.S.N. FOR GROUTING REQUIREMENTS BENEATH COLUMN BASES AND BEARING PLATES.

H. STRUCTURAL STEEL WELDING

1. ALL WELDING OF STRUCTURAL STEEL SHALL CONFORM TO AISC 360, SECTION J2 AND FOLLOW THE PREQUALIFIED JOINT DETAILS INCLUDED THEREIN. WELDING OF JOINTS THAT INCLUDE REINFORCING STEEL SHALL CONFORM TO AWS D1.4.
2. WELDING SHALL BE PERFORMED BY WELDERS HOLDING VALID CERTIFICATES AND HAVING CURRENT EXPERIENCE IN THE TYPE OF WELD SHOWN ON THE DRAWINGS. CONTRACTOR MAY SHOP WELD OR FIELD WELD AT HIS DISCRETION. ALL COMPLETE-JOINT-PENETRATION (CJP) WELDS SHALL BE TESTED AND CERTIFIED BY AN INDEPENDENT TESTING LABORATORY.
3. ALL WELDING SHALL USE PREQUALIFIED MATCHING FILLER METALS PER AWS D1.1, TABLE 3.1, WITH A MIN. TENSILE STRENGTH OF 70 KSI U.N.O. WELDS BETWEEN REINFORCING BARS SHALL USE PREQUALIFIED MATCHING FILLER METALS PER AWS D1.4, TABLE 5.1, WITH A MIN. TENSILE STRENGTH OF 90 KSI U.N.O. (MIN. TENSILE STRENGTHS FOR FILLER METALS USED IN WELDS BETWEEN REINFORCING BARS AND STRUCTURAL STEEL MAY BE 70 KSI).
4. WELDING SHALL BE PERFORMED IN ACCORDANCE WITH A WELDING PROCEDURE SPECIFICATION (WPS) AS REQUIRED IN AWS D1.1. THE WPS VARIABLES SHALL BE WITHIN THE PARAMETERS ESTABLISHED BY THE FILLER METAL MANUFACTURER. THE WPS SHALL BE SUBMITTED TO THE OWNER'S TESTING AGENCY FOR REVIEW PRIOR TO FABRICATION AND ERECTION. COPIES OF THE WPS SHALL BE ON SITE AND AVAILABLE TO ALL WELDERS AND THE SPECIAL INSPECTOR.
5. WELD LENGTHS CALLED OUT ON PLANS OR DETAILS ARE MINIMUM NET EFFECTIVE LENGTHS U.N.O.
6. ALL MISC. FILLET WELDS NOT NOTED, INCLUDING THOSE FOR STIFFENERS, MISC. PLATES, ETC., SHALL BE PER AISC 360, TABLE J2.4.
7. WELDS SHALL BE SEQUENCED TO MINIMIZE RESIDUAL STRESS DUE TO WELD SHRINKAGE.

I. STRUCTURAL STEEL BOLTS, ANCHORS, HEADED STUDS

1. STRUCTURAL STEEL BOLTS, ANCHORS, ETC., SHALL CONFORM TO THE FOLLOWING STANDARDS AND MATERIAL PROPERTIES U.N.O:

COMPONENT:	STANDARD:	Fy:
BOLTS	ASTM F3125, GRADE A325	---
	OR GRADE A490 WHERE NOTED	---
NUTS	ASTM A563	---
WASHERS	ASTM F436	---
ANCHOR RODS	ASTM F1554, GRADE 36	36 KSI
	OR GRADE 55 WHERE NOTED	55 KSI
	OR GRADE 105 WHERE NOTED	105 KSI
	(GRADE 55 RODS SHALL COMPLY WITH WELDABILITY SUPPLEMENT S1)	
WASHERS (AT ANCHOR RODS)	ASTM A36	36 KSI
	OR ASTM F844 (USS STANDARD)	---
	(F844 WASHERS PERMITTED ONLY FOR 3/4" DIA. RODS AT 1 1/16" MAX. DIA. PUNCHED HOLES IN BASE PLATE WHERE NO WELD REQ'D BETWEEN WASHER AND BASE PLATE)	

2. ALL BOLTS SHALL BE INSTALLED AS SNUG-TIGHTENED JOINTS WITH THREADS EXCLUDED FROM SHEAR PLANE (TYPE "X" CONNECTION) U.N.O. HIGH-STRENGTH BOLT ASSEMBLIES SHALL BE IN ACCORDANCE WITH THE RCSC "SPECIFICATION FOR STRUCTURAL JOINTS USING HIGH-STRENGTH BOLTS" AND SHALL BE SNUG TIGHTENED USING ANY AISC APPROVED METHOD U.N.O. ALL BOLTS IN SLOTTED OR OVERSIZED HOLES AND ALL HIGH-STRENGTH BOLTS SHALL BE INSTALLED WITH HARDENED WASHERS.
3. BOLTED CONNECTIONS INCLUDED IN THE SEISMIC LOAD RESISTING SYSTEM (SLRS) SHALL MEET THE REQUIREMENTS FOR CLASS "A", SLIP-CRITICAL FAYING SURFACES IN ACCORDANCE WITH AISC 360, SECTION J3.8 (EXCEPTION: FAYING SURFACES OF WELDED JOINTS WHOSE PARTS ARE JOINED INITIALLY BY ERECTION BOLTS NEED ONLY BE PREPARED SUCH THAT THEY ARE FREE FROM DIRT, BURRS, AND OTHER DEFECTS THAT WOULD PREVENT SOLID FIT-UP OF THE PARTS TO BE JOINED). BOLTS SHALL BE INSTALLED IN STANDARD HOLES U.N.O. AND PRETENSIONED PER ANY AISC APPROVED METHOD.
4. ALL ANCHOR RODS AT STEEL COLUMN BASE PLATES SHALL BE RODS WITH THREADS BOTH ENDS WITH HEAVY HEX NUT FULLY THREADED ONTO EMBEDDED END. TACK WELD NUT TO ROD OR SPOIL THREADS TO PREVENT NUT FROM BACKING OFF. ANCHOR RODS SHALL NOT BE REPAIRED, REPLACED OR FIELD-MODIFIED WITHOUT WRITTEN APPROVAL FROM THE ENGINEER OF RECORD.
5. ALL CONNECTIONS INVOLVING WOOD MEMBERS, INCLUDING THOSE WITH THREADED ROD, THREADED STUDS, FOUNDATION ANCHOR BOLTS, THRU-BOLTS, ETC., SHALL USE ASTM A307 MATERIAL U.N.O. ALL BOLTS, ANCHOR BOLTS, EXPANSION BOLTS, ETC., SHALL BE INSTALLED WITH STEEL WASHERS AT FACE OF WOOD.
6. HEADED STEEL STUDS AND AUTOMATIC WELDED DOWELS SHOWN ON PLANS OR DETAILS SHALL BE BY NELSON STUD WELDING, INC., PER ICC ESR-2856 AND ICC ESR-2907, RESPECTIVELY. STUDS SHALL HAVE FLUXED ENDS AND BE AUTOMATICALLY END-WELDED WITH SUITABLE EQUIPMENT (NO FILLET WELDING OF STUDS PERMITTED U.N.O.) AT SPACINGS INDICATED ON THE PLANS OR DETAILS. WELDING OF STUDS SHALL CONFORM TO THE REQUIREMENTS OF AWS D1.1 AND AWS C5.4. HEADED STUDS AND AUTOMATIC WELDED DOWELS BY OTHER MANUFACTURERS MAY BE SUBSTITUTED PROVIDED THEY ARE OF EQUIVALENT CAPACITY FOR THE INTENDED APPLICATION AND HAVE CURRENT ICC APPROVAL.
7. WHERE A SPECIFIC EXPANSION ANCHOR, SCREW ANCHOR, OR EPOXY PRODUCT IS SPECIFIED ON PLANS OR DETAILS, ONLY THE SPECIFIED PRODUCT SHALL BE USED AND NO SUBSTITUTIONS ARE ALLOWED. WHERE AN EXPANSION ANCHOR, SCREW ANCHOR, OR EPOXY PRODUCT IS SPECIFIED ON PLANS OR DETAILS BUT A SPECIFIC PRODUCT IS NOT STATED, ANY OF THE RESPECTIVE PRODUCTS LISTED BELOW ARE ACCEPTABLE. THE USE OF PRODUCTS NOT INCLUDED BELOW IS NOT ALLOWED. ALL PRODUCTS SHALL BE INSTALLED WITH SPECIAL INSPECTION.

7.1. EXPANSION ANCHORS IN CONCRETE SHALL BE HILTI KB-TZ2 (ICC ESR-4266), SIMPSON STRONG-BOLT 2 (ICC ESR-3037), OR DEWALT POWER-STUD+ SD2 (ICC ESR-2502) U.N.O. EXPANSION ANCHORS IN MASONRY SHALL BE SIMPSON STRONG-BOLT 2 (IAPMO ER-0240), HILTI KWIK BOLT 3 (ICC ESR-1385) OR DEWALT POWER-STUD+ SD1 (ICC ESR-2966). EXPANSION ANCHORS SHALL BE INSTALLED WITH SPECIAL INSPECTION.

7.2. SCREW ANCHORS SHALL BE DEWALT SCREW-BOLT+ PER ICC ESR-4042 FOR MASONRY AND ICC ESR-3889 FOR CONCRETE, SIMPSON TITEN HD PER ICC ESR-1056 FOR MASONRY AND ICC ESR-2713 FOR CONCRETE, HILTI KWIK HUS-EZ PER ICC ESR-3056 FOR MASONRY AND ICC ESR-3027 FOR CONCRETE. SCREW ANCHORS SHALL BE INSTALLED WITH SPECIAL INSPECTION.

7.3. EPOXY ANCHORS IN CONCRETE (ALL-THREAD, REBAR, ETC.) SHALL USE HILTI HIT-RE 500 V3 (ICC ESR-3814), SIMPSON SET-3G (ICC ESR-4057), OR DEWALT PURE110+ (ICC ESR-3298) U.N.O. ALL EPOXY ANCHORS IN MASONRY (ALL-THREAD, REBAR, ETC.) SHALL USE SIMPSON SET-XP (IAPMO ER-0265), HILTI HIT-HY 270 (ICC ESR-4143) OR DEWALT AC100+ GOLD (ICC ESR-3200) U.N.O. EPOXY ANCHORS SHALL BE INSTALLED WITH SPECIAL INSPECTION.

STANDARD ABBREVIATIONS

A.B.	ANCHOR BOLT
ACI	AMERICAN CONCRETE INSTITUTE
A.C.S.	ALL COMMON SURFACES
AISC	AMERICAN INSTITUTE OF STEEL CONSTRUCTION
AISI	AMERICAN IRON AND STEEL INSTITUTE
ALT.	ALTERNATE
ANSI	AMERICAN NATIONAL STANDARDS INSTITUTE
A.R.	ANCHOR ROD
ARCH'L.	ARCHITECTURAL
ASTM	AMERICAN SOCIETY FOR TESTING AND MATERIALS
ATS	ANCHOR TIE-DOWN SYSTEM
AWS	AMERICAN WELDING SOCIETY
B.F.	BOUNDARY FASTENERS
B.F.F.	BELOW FINISH FLOOR
BOT.	BOTTOM
BRG.	BEARING
CANT.	CANTILEVERED
C.J.	CONTROL JOINT
C.J.P.	COMPLETE JOINT PENETRATION
℄	CENTER LINE
CLR.	CLEAR DIMENSION TO FACE OF REBAR
COL.	COLUMN
CONT.	CONTINUOUS
CRSI	CONCRETE REINFORCING STEEL INSTITUTE
DIA.	DIAMETER
DIAG.	DIAGONAL
DWG.	DRAWING
E.F.	EACH FACE
ELECT.	ELECTRICAL
ELEV.	ELEVATION
E.O.R.	ENGINEER OF RECORD
EQ.	EQUAL
EP	END POST
ES	END STUD(S)
ESR	EVALUATION SERVICE REPORT
E.W.	EACH WAY
F.F.	FINISH FLOOR
FLR.	FLOOR
FRTW	FIRE RETARDANT TREATED WOOD
FT.	FOOT
FTG.	FOOTING
GA.	GAUGE
GLB	GLULAM BEAM
G.S.N.	GENERAL STRUCTURAL NOTES
G.T.	GIRDER TRUSS
HORIZ.	HORIZONTAL
HSS	HOLLOW STRUCTURAL SECTION
IAMPO	INTERNATIONAL ASSOCIATION OF PLUMBING AND MECHANICAL OFFICIALS
IBC	INTERNATIONAL BUILDING CODE
ICC	INTERNATIONAL CODE COUNCIL
I.D.	INSIDE DIAMETER
INFO.	INFORMATION
JT.	JOINT
K	KIP (1,000 LBS)
K.O.	KNOCKOUT
KP	KING POST
KS	KING STUD(S)
KSI	KIPS PER SQUARE INCH
LLH	LONG LEG HORIZONTAL
LLV	LONG LEG VERTICAL
LSL	LAMINATED STRAND LUMBER
LVL	LAMINATED VENEER LUMBER
MFR.	MANUFACTURER
MAX.	MAXIMUM
MECH.	MECHANICAL
MIN.	MINIMUM
MISC.	MISCELLANEOUS
N.T.S.	NOT TO SCALE
o.c.	ON CENTER
O.D.	OUTSIDE DIAMETER
OPP.	OPPOSITE
P	POST
PL.	PLATE
PLF	POUNDS PER LINEAR FOOT
PLYWD.	PLYWOOD
PSF	POUNDS PER SQUARE FOOT
PSI	POUNDS PER SQUARE INCH
PSL	PARALLEL STRAND LUMBER
RCSC	RESEARCH COUNCIL ON STRUCTURAL CONNECTIONS
REQ'D.	REQUIRED
SIM.	SIMILAR
SLRS	SEISMIC LOAD RESISTING SYSTEM
SPEC.	SPECIFICATION
STD.	STANDARD
STK	STACKED
SW	SHEAR WALL
T & B	TOP AND BOTTOM
T & G	TONGUE AND GROOVE
THRU	THROUGH
T.O.	TOP OF
T.O.D.	TOP OF DECK
T.F.	TOP OF FOOTING
T.O.L.	TOP OF LEDGER
T.O.S.	TOP OF STEEL
T.W.	TOP OF WALL
TP	TRIMMER POST
TS	TRIMMER STUD(S)
TYP.	TYPICAL
U.N.O.	UNLESS NOTED OTHERWISE
VERT.	VERTICAL
w/	WITH
w/o	WITHOUT
WT.	WEIGHT

SHEET INDEX

● INDICATES PREVIOUSLY / CURRENTLY ISSUED SHEETS

PLAN CHECK REVISIONS – 10/23/2023 (revision 1)	PLANCHECK SUBMITTAL	SHEET	TITLE
●	●	S0.1	GENERAL STRUCTURAL NOTES
●	●	S0.2	GENERAL STRUCTURAL NOTES (CONT'D.)
●		S0.2.1	GENERAL STRUCTURAL NOTES (CONT'D.)
●	●	S0.3	SCHEDULES AND NOTES
●	●	S0.4	TYPICAL DETAILS
●	●	S0.5	TYPICAL DETAILS
●	●	S0.6	TYPICAL DETAILS
●	●	S1.1	SITE WALL PLAN
●	●	S1.2	FOUNDATION PLAN
●	●	S2.1	2ND FLOOR FRAMING PLAN
●	●	S2.2	3RD FLOOR & LOW ROOF FRAMING PLAN
●	●	S2.3	ROOF FRAMING PLAN
●	●	S3.1	FOUNDATION DETAILS
●	●	S3.2	FOUNDATION DETAILS
●	●	S3.3	FOUNDATION DETAILS
●	●	S3.4	FOUNDATION DETAILS
●	●	S3.5	FOUNDATION SECTIONS
●	●	S4.1	FLOOR FRAMING DETAILS
●	●	S4.2	FLOOR FRAMING DETAILS
●	●	S4.3	FLOOR FRAMING DETAILS
●	●	S4.4	FLOOR FRAMING DETAILS
●	●	S4.5	FLOOR FRAMING DETAILS
●	●	S4.6	FLOOR FRAMING DETAILS
●		S4.7	FLOOR FRAMING DETAILS
●	●	S5.1	ROOF FRAMING DETAILS
●	●	S5.2	ROOF FRAMING DETAILS
●	●	S6.1	MOMENT FRAME ELEVATIONS

WRIGHT STRUCTURAL ENGINEERS
ENGINEERED IN THE USA
2 Venture, Suite 200
Irvine, CA 92618
phone (949) 477-4001
CA@wrightengineers.com
wrightengineers.com
Las Vegas | Orange County | Phoenix | Salt Lake City | Dallas

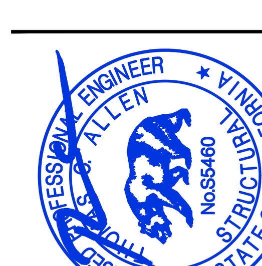

10/24/2023

HELIOTROPE DUPLEX
407 Heliotrope Ave.
Corona Del Mar, CA 92625

COPYRIGHT (C) WRIGHT ENGINEERS. USE OF THIS DRAWING AND ANY REPRODUCTIONS SHALL BE RESTRICTED TO THE ORIGINAL SITE FOR WHICH IT WAS PREPARED. REPRODUCTION OR RE-USE OF THIS DRAWING FOR ANY OTHER PURPOSE IS STRICTLY PROHIBITED.

NUMBER	DATE	DESCRIPTION
1	10-23-2023	PLAN CHECK REVISIONS

DATE: May 25, 2023
DESIGN BY: RO
PROJECT MGR: RO
PROJECT NO: 220376

GENERAL STRUCTURAL NOTES

S01-220376-G

S0.1

GENERAL STRUCTURAL NOTES (CONT'D.)

J. WOOD

1. SAWN FRAMING LUMBER SHALL COMPLY WITH THE GRADING RULES OF THE WESTERN WOOD PRODUCTS ASSOCIATION OR THE WEST COAST LUMBER INSPECTION BUREAU. ALL SAWN LUMBER SHALL BE STAMPED WITH THE GRADE MARK OF AN APPROVED LUMBER GRADING AGENCY. SAWN LUMBER SHALL HAVE THE FOLLOWING MIN. GRADE, U.N.O.:

USE:	MATERIAL:
2x4 TOP PLATES	DOUGLAS FIR STANDARD GRADE
2x6 TOP PLATES	DOUGLAS FIR NO. 2
ALL STUDS, BLOCKING	DOUGLAS FIR NO. 2
2x BOTTOM PLATES	DOUGLAS FIR STANDARD GRADE
6x BEAMS AND 6x POSTS	DOUGLAS FIR NO. 1
JOISTS AND ALL OTHER SAWN LUMBER	DOUGLAS FIR NO. 2

2. ALL FRAMING LUMBER SHALL HAVE A MAXIMUM 19% MOISTURE CONTENT AT TIME OF INSTALLATION AND FABRICATION.

3. LUMBER RESTING ON CONCRETE OR MASONRY SHALL COMPLY WITH CBC 2304.12. FASTENERS IN PRESERVATIVE-TREATED WOOD SHALL COMPLY WITH EITHER CBC 2304.10.5 OR ICC REPORT APPLICABLE TO THE WOOD PRESERVATIVE TREATMENT.

4. GLUE-LAMINATED (GLULAM) BEAMS SHALL BE DOUGLAS FIR COMBINATION 24F-V4 U.N.O. FABRICATION AND HANDLING SHALL CONFORM WITH THE LATEST AITC AND ASTM STANDARDS. BEAMS SHALL BEAR AN APPROPRIATE GRADE STAMP CLEARLY NOTING ITS DESIGN PROPERTIES. BEAMS SHALL BE MFR'D WITH 3500 FT. RADIUS OF CURVATURE UNLESS ALTERNATE CAMBER IS SPECIFICALLY NOTED ON THE DRAWINGS. GLULAM BEAMS WITH 1/2" DIMENSION WIDTHS MAY BE USED IN LIEU OF THE 1/8" DIMENSION WIDTHS SPECIFIED ON PLANS (i.e. 5 1/2" WIDTH MAY BE USED IN LIEU OF 5 1/8" WIDTH AND NOT VICE VERSA).

5. LAMINATED STRAND LUMBER (LSL) SHALL BE WEYERHAUSER TIMBERSTRAND LSL (ICC ESR-1387). MINIMUM GRADE SHALL BE AS FOLLOWS:

MEMBER WIDTH:	MEMBER DEPTH:	MINIMUM GRADE:
1 1/2"	ALL	1.6E
2 1/2"	ALL	1.6E
1 3/4"	ALL	1.55E
3 1/2"	9 1/4" OR MORE	1.55E
3 1/2"	8 5/8" OR LESS	1.3E

6. LAMINATED VENEER LUMBER (LVL) SHALL BE WEYERHAUSER MICROLLAM LVL (ICC ESR-1387), LOUISIANA PACIFIC GANG-LAM (ICC ESR-2403), OR BOISE CASCADE VERSA-LAM (ICC ESR-1040). GRADE SHALL BE 1.9E OR HIGHER. EXCEPTION: LVL RIM BOARD SHALL BE GRADE 1.3E OR HIGHER. CONNECTION OF MULTIPLE PLY BEAMS SHALL BE PER MFR'S. SPECIFICATIONS.

7. PARALLEL STRAND LUMBER (PSL) SHALL BE WEYERHAUSER PARALLAM PSL (ICC ESR-1387) GRADE DF 2.0E OR HIGHER.

8. DO NOT NOTCH OR DRILL TRUSSES, JOISTS, OR BEAMS U.N.O. WITHOUT PRIOR APPROVAL OF THE STRUCTURAL ENGINEER THROUGH THE ARCHITECT. DOUBLE UP FLOOR JOISTS AND BLOCKING UNDER WALLS THAT RUN PARALLEL TO THE JOISTS. PROVIDE FULL DEPTH SOLID BLOCKING BETWEEN JOISTS AT BEARING, U.N.O.

9. ALL BOLTS SHALL BE INSTALLED IN HOLES BORED WITH A BIT 1/16 INCH LARGER THAN THE DIA. OF THE BOLT. BOLTS AND NUTS SEATING ON WOOD SHALL HAVE CUT STEEL WASHERS UNDER HEADS AND NUTS. SPOIL THREADS TO PREVENT LOOSENING. LAG BOLTS SHALL BE INSTALLED IN PRE-DRILLED HOLES BY TURNING WITH A WRENCH.

10. PREFABRICATED WOOD I-JOISTS SHALL BE LOUISIANA PACIFIC LPI SERIES (ICC ESR-1305), TRUS JOIST TJI SERIES (ICC ESR-1153), OR BOISE BCI SERIES (ICC ESR-1336). REFER TO FRAMING PLAN NOTES FOR SPECIFIC DEPTHS, SPACING, AND SERIES. I-JOISTS SHALL BE FABRICATED AND ERECTED IN ACCORDANCE WITH THE APPROPRIATE ICC REPORT. I-JOIST HANGERS SHALL BE SIMPSON ITS OR MIT SERIES OR EQUAL, U.N.O. ON PLAN. ALL I-JOIST AND HANGER SUBSTITUTIONS MUST BE APPROVED BY THE ENGINEER.

11. ALL WOOD CONSTRUCTION CONNECTORS SHOWN ON PLANS OR DETAILS SHALL BE SIMPSON STRONG-TIE OR EQUAL U.N.O. HARDWARE BY OTHER MANUFACTURERS MAY BE SUBSTITUTED PROVIDED THEY ARE OF EQUIVALENT CAPACITY FOR THE INTENDED APPLICATION AND HAVE CURRENT ICC APPROVAL. SUCH SUBSTITUTIONS MUST BE APPROVED BY THE EOR. HARDWARE SHALL BE INSTALLED WITH ALL REQ'D. FASTENERS PER MFR'S. SPEC'S. STRAPS OF HEAVIER GAGE THAN SPECIFIED ON PLANS MAY BE USED w/ MIN. FASTENER REQUIREMENTS PER PLAN (e.g. CS16 w/ (26) 8d IN LIEU OF CS18 w/ (26) 8d).

12. SEE FOUNDATION PLAN FOR BOTTOM PLATE ANCHORAGE REQUIREMENTS.

13. ALL NAILS EXCEPT 16d NAILS SHALL BE COMMON NAILS U.N.O. 16d NAILS MAY BE 16d SINKER, 16d BOX, 10d-131 OR 12d COMMON U.N.O. (EXCEPTION: WOOD CONSTRUCTION CONNECTORS SHALL BE PER MFR'S. SPECIFICATIONS.) NAILS SHALL BE DRIVEN SO THAT HEADS ARE FLUSH WITH WOOD SURFACE. OVER-OR UNDER-DRIVEN SHEATHING NAILS AT SHEAR WALL, ROOF, AND FLOOR SHEATHING PANELS, WHERE THICKNESS IS MINIMAL, CAN RESULT IN REDUCED CAPACITY. IF NO MORE THAN 20% OF THE FASTENERS AROUND THE PERIMETER OF PANELS ARE OVERDRIVEN BY UP TO 1/8", THE PANEL IS ACCEPTABLE. IF MORE THAN 20% OF THE FASTENERS AROUND THE PERIMETER OF PANELS ARE OVERDRIVEN, OR IF ANY ARE OVERDRIVEN BY MORE THAN 1/8", ADDITIONAL FASTENERS SHALL BE DRIVEN. FOR EVERY TWO FASTENERS OVERDRIVEN, ONE ADDITIONAL FASTENER SHALL BE DRIVEN. ALL OTHER CONDITIONS WHERE 1-1/2" OR GREATER MEMBERS ARE FASTENED TOGETHER (GENERAL FRAMING), OVERDRIVEN FASTENERS DO NOT AFFECT THE CAPACITY OF THE CONNECTION.

NAIL SIZE:	SHANK DIA:	LENGTH:	NAIL SIZE:	SHANK DIA.:	LENGTH:
16d COMMON	.162"	3 1/2"	12d COMMON	.148"	3 1/4"
16d SINKER	.148"	3 1/4"	10d COMMON	.148"	3"
16d BOX	.135"	3 1/2"	8d COMMON	.131"	2 1/2"
10d-131	.131"	3"			

14. ALL PLYWOOD SHALL BE LAID WITH FACE GRAIN PERPENDICULAR TO SUPPORTS, SHALL BE C-D OR C-C SHEATHING CONFORMING TO CBC 2303.1.5 AND SHALL CONFORM TO THE FOLLOWING NOMINAL THICKNESS, SPAN RATING AND NAILING PATTERN U.N.O.:

THICKNESS:	SPAN RATING	EDGE NAILING:	FIELD NAILING:
3/8"	24/0	8d AT 6" o.c.	8d AT 12" o.c.
7/16"	24/16	8d AT 6" o.c.	8d AT 12" o.c.
15/32"	32/16	8d AT 6" o.c.	8d AT 12" o.c.
19/32"	40/20	10d AT 6" o.c.	10d AT 12" o.c.
3/4"	48/24	10d AT 6" o.c.	10d AT 12" o.c.
1"	60/48	10d AT 6" o.c.	10d AT 12" o.c.
1 1/8"	60/48	10d AT 6" o.c.	10d AT 12" o.c.

15. A.P.A. PERFORMANCE RATED SHEATHING (OSB) MAY BE USED AS AN ALTERNATE TO PLYWOOD. RATED SHEATHING SHALL COMPLY WITH PRP-108 OR USDOC-PS2, EXPOSURE 1, AND SHALL HAVE A SPAN RATING EQUIVALENT TO OR BETTER THAN THE PLYWOOD IT REPLACES. ATTACHMENT AND THICKNESS SHALL BE THE SAME AS THE PLYWOOD IT REPLACES. INSTALL PER MFR'S RECOMMENDATIONS.

16. FOR PLYWOOD OR A.P.A. RATED SHEATHING: FULL WIDTH PANELS SHALL BE USED WHEREVER POSSIBLE. AT ROOF SHEATHING, PANELS 16" TO 24" WIDE SHALL HAVE EDGES SUPPORTED BY 2x BLOCKING OR (2) PSCL CLIPS BETWEEN EACH SUPPORTING MEMBER AND PANELS 12" TO 16" WIDE SHALL HAVE EDGES SUPPORTED BY 2x BLOCKING. PROVIDE EDGE NAILING AT ALL BLOCKED PANEL EDGES.

17. BEAMS OR TWO PLY (OR LARGER) GIRDER TRUSSES BEARING ON TOP PLATES SHALL BE ATTACHED TO TOP PLATES WITH A34 ONE SIDE AND (2) 16d TOENAILS OTHER SIDE, U.N.O. ON PLAN.

18. SIMPSON HIGH-STRENGTH WOOD STRONG-WALLS ARE SPECIFIED BY MODEL NUMBER ON THE PLANS (e.g. WSWH24x8). ALL STRONG-WALLS SHALL BE MANUFACTURED AND INSTALLED IN ACCORDANCE w/ ICC ESR-2652.

J. WOOD (CONT'D.)

19. THE FOLLOWING IS A LIST OF ICC-ES OR IAPMO ES REPORTS NOT SPECIFIED ELSEWHERE:

REPORT:	HARDWARE:
IAPMO-0112	LTP4, A35, A34, 44, H2A, H2.5T, L, RBC
ESR-2236	SDS SCREWS
ESR-2330	DHU, PHD, HDQ8, HHDQ
ESR-2105	ST, HST, MST, LSTA, MSTA, MSTC, MSTI, CS, CMST, CMSTC16
ESR-2549	LU, U, HU, HUC, LUS, MUS, HUS, HHUS, SUR/L, HGUS
ESR-2613	H, LTS, MTS, HTS, SPH
ESR-1622	AB, ABA, ABE, ABU
ESR-2604	CC, ECC, CCQ, ECCQ, AC, EAC, LPC, PC, EPC
ESR-2553	JB, LB, W, WNP, WNPU, HW, HWU, HUTF
ESR-2615	GLTV, HGLTV, HHB, GB, HGB, HHBD, W, WP, WPU, WNP, WNPU, HW, HWU, GLT, HGLT, GLS, HGLS, GLST, HGLST, EG, MEG, LEG, MSC
ESR-2608	SS, HSS, RPS
ESR-2551	LSU, LSSU, LSSUI, THS, THAC, THAI, VPA
ESR-2552	IUS, OUT, U, HU, HUS, HUS, HHUS, SUR/L, HSUR/L
ESR-2555	MASA

K. EXTERIOR ANCHOR BOLT SUBSTITUTIONS

1. EXTERIOR ANCHOR BOLTS ARE DEFINED AS ANCHOR BOLTS LOCATED LESS THAN 6" FROM SLAB EDGES, STEPS, TURN DOWNS, OPENINGS, OR SIMILAR DISCONTINUITIES AND DO NOT INCLUDE ANCHORS FOR HOLDOWNS. EXTERIOR ANCHOR BOLT SUBSTITUTIONS ARE PERMITTED AS LISTED IN THIS SECTION.

2. BOLT-TYPE SUBSTITUTIONS IN SHEAR WALLS SHALL BE INSTALLED w/ PLATE WASHERS PER SHEAR WALL SCHEDULE.

3. 1/2" DIA. THREADED CONCRETE ANCHORS AT THE SAME SPACING MAY BE USED IN LIEU OF WET-SET ANCHOR BOLTS AT EXTERIOR NON- SHEAR WALLS. 1/2" DIA. THREADED CONCRETE ANCHORS AT 2:1 (THREADED ANCHORS : WET SET ANCHORS) RATIO MAY BE USED IN LIEU OF WET-SET ANCHORS AT EXTERIOR SHEAR WALLS. ALL THREADED CONCRETE ANCHORS SHALL BE EMBEDDED 4", SHALL BE SPACED NOT CLOSER THAN 5 1/2" o.c. AND SHALL BE SIMPSON TITEN HD (ICC ESR-2713). AT 3x OR LARGER BOTTOM PLATES, SCREW ANCHORS AND PLATE WASHERS MAY BE COUNTERSUNK UP TO 1/2" INTO BOTTOM PLATE TO ACHIEVE REQ'D EMBEDMENT.

L. INTERIOR ANCHOR BOLT SUBSTITUTIONS

1. INTERIOR ANCHOR BOLTS ARE DEFINED AS ANCHOR BOLTS LOCATED A MIN. OF 6" FROM SLAB EDGES, STEPS, TURN DOWNS, OPENINGS, OR SIMILAR DISCONTINUITIES, AND DO NOT INCLUDE ANCHORS FOR HOLDOWNS. INTERIOR ANCHOR BOLT SUBSTITUTIONS ARE PERMITTED AS LISTED IN THIS SECTION.

2. BOLT-TYPE SUBSTITUTIONS IN SHEAR WALLS SHALL BE INSTALLED w/ PLATE WASHERS PER SHEAR WALL SCHEDULE.

3. 1/2" AND 3/4" DIA. THREADED CONCRETE ANCHORS AT THE SAME SPACING MAY BE USED IN LIEU OF WET-SET ANCHOR BOLTS AT INTERIOR WALLS, INCLUDING SHEAR WALLS. MINIMUM EMBEDMENT SHALL BE 4" FOR 1/2" DIA. ANCHORS AND 6 1/4" FOR 3/4" DIA. ANCHORS. THREADED CONCRETE ANCHORS SHALL BE SIMPSON TITEN HD (ICC ESR-2713) WITH SPACING NOT CLOSER THAN 3" o.c.

4. INTERIOR NON-LOAD BEARING PARTITION WALLS MAY BE ANCHORED TO THE SLAB WITH SHOT PINS (AS NOTED BELOW) AT 24" o.c. MAX. INSTALL ALL FASTENERS PER ICC REPORT AND MFR'S RECOMMENDATIONS.

LOCATION	ANCHORS	DIAMETER	EMBEDMENT
SLAB ON GRADE	SIMPSON (ESR-2138) PDPAWL-287MG	0.1570"	1 1/4" MIN.
	HILTI (ESR-2379) X-CP 72	0.145"	1 1/4" MIN.

M. HOLDOWN ANCHORAGE

1. VERIFY LOCATION OF HOLDOWNS WITH ROUGH FRAMING TO ENSURE PROPER AND ACCURATE INSTALLATION.

2. EMBEDDED BOLT REQUIREMENTS FOR HOLDOWN ANCHORAGE SHALL BE AS FOLLOWS:

ALL THREAD ANCHOR BOLT OPTION:

SIMPSON HOLDOWN:	BOLT DIA.:	PLATE WASHER:	DE (MIN.): (2)	DI (MIN.): (3)	NUMBER OF "C" BARS: (1)
HDU2	5/8"	1 1/2"x1 1/2"x3/8"	6"	11"	(2) #4
HDU4	5/8"	1 1/2"x1 1/2"x3/8"	6"	11"	(2) #4
HDU5	5/8"	1 1/2"x1 1/2"x3/8"	6"	11"	(2) #4
HDU8	7/8"	1 3/4"x1 3/4"x3/8"	6"	11"	(2) #4
HDQ8	7/8"	1 3/4"x1 3/4"x3/8"	7"	11"	(4) #4
HDU11	1"	2"x2"x3/8"	7"	11"	(4) #4
HDU14	1"	2"x2"x3/8"	7"	11"	(4) #4
HHDQ11	1"	2"x2"x3/8"	7"	11"	(4) #4
HHDQ14	1"	2"x2"x3/8"	7"	11"	(4) #4
HD19	1 1/4"	2 1/4"x2 1/4"x1/2"	9"	13"	(6) #4

(1) AT CORNER CONDITIONS, HALF OF THE "C" BARS SHALL BE PLACED ON EACH SLAB EDGE

(2) EMBEDMENT DEPTH AT EXTERIOR OF SLAB.

(3) EMBEDMENT DEPTH AT INTERIOR OF SLAB. BOLTS MORE THAN 1'-0" FROM ANY SLAB EDGE OR STEP SHALL BE CONSIDERED INTERIOR. AT STEPS, EMBEDMENT SHALL BE MEASURED FROM LOWER SLAB.

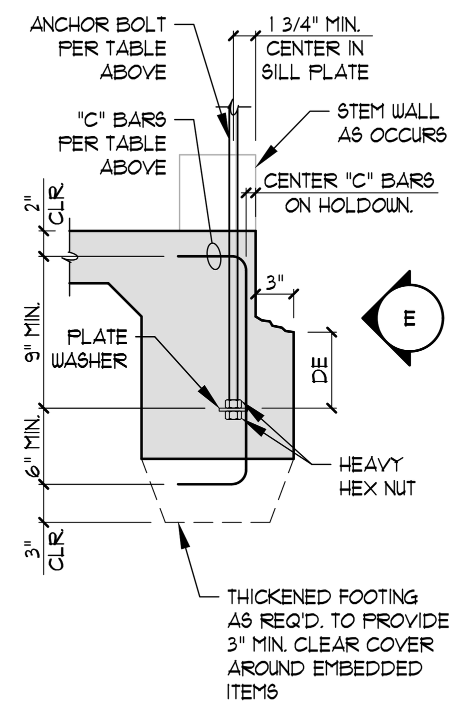

SECTION AT EDGE OF SLAB

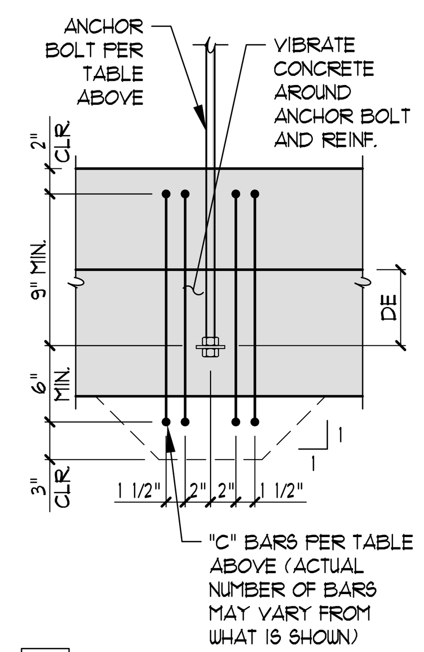

E ELEVATION

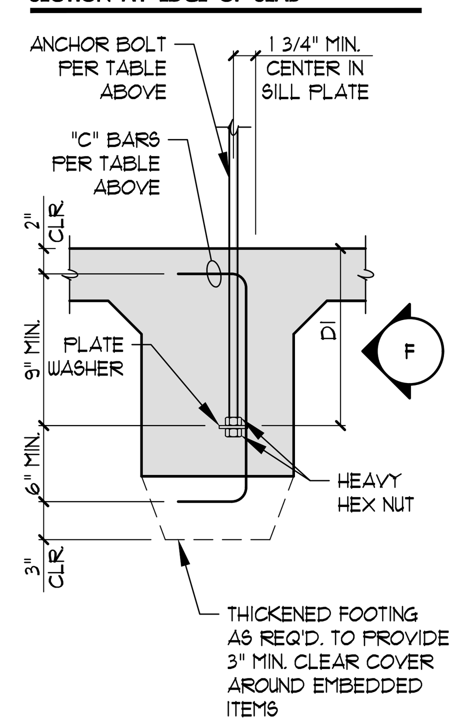

SECTION AT INTERIOR OF SLAB

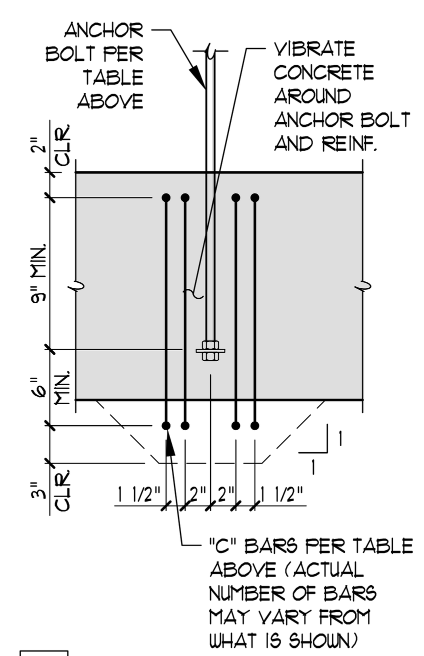

F ELEVATION

3. EMBEDDED BOLT REQUIREMENTS FOR HOLDOWN ANCHORAGE SHALL BE AS FOLLOWS:

ALL THREAD ANCHOR BOLT OPTIONS:

SIMPSON HOLDOWN:	BOLT DIA.:	PLATE WASHER:	DE (MIN.): (2)	DI (MIN.): (3)	NUMBER OF "C" BARS: (1)
HDU2	5/8"	1 1/2"x1 1/2"x3/8"	6"	11"	(2) #4
HDU4	5/8"	1 1/2"x1 1/2"x3/8"	6"	11"	(2) #4
HDU5	5/8"	1 1/2"x1 1/2"x3/8"	6"	11"	(2) #4
HDU8	7/8"	1 3/4"x1 3/4"x3/8"	6"	11"	(2) #4
HDQ8	7/8"	1 3/4"x1 3/4"x3/8"	7"	11"	(4) #4
HDU11	1"	2"x2"x3/8"	7"	11"	(4) #4
HDU14	1"	2"x2"x3/8"	7"	11"	(4) #4
HHDQ11	1"	2"x2"x3/8"	7"	11"	(4) #4
HHDQ14	1"	2"x2"x3/8"	7"	11"	(4) #4
HD12	1 1/8"	2 1/4"x2 1/4"x1/2"	9"	13"	(6) #4
HD19	1 1/4"	2 1/4"x2 1/4"x1/2"	9"	13"	(6) #4

(1) AT CORNER CONDITIONS, HALF OF THE "C" BARS SHALL BE PLACED ON EACH SLAB EDGE

(2) EMBEDMENT DEPTH AT EXTERIOR OF SLAB.

M. HOLDOWN ANCHORAGE (CONT'D.)

(3) EMBEDMENT DEPTH AT INTERIOR OF SLAB. BOLTS MORE THAN 1'-0" FROM ANY SLAB EDGE OR STEP SHALL BE CONSIDERED INTERIOR. AT STEPS, EMBEDMENT SHALL BE MEASURED FROM LOWER SLAB.

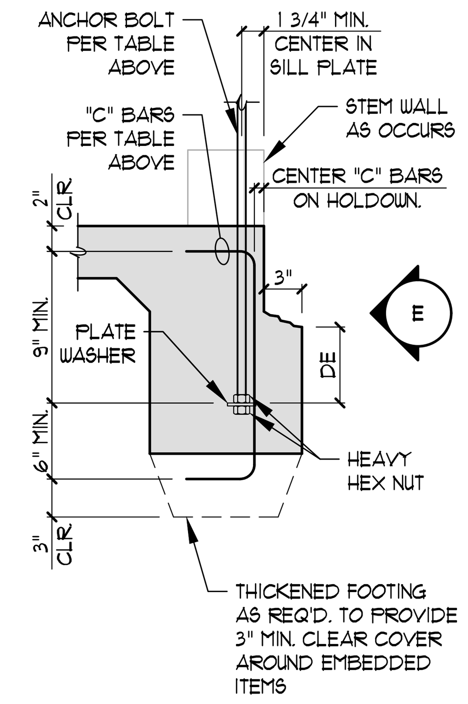

SECTION AT EDGE OF SLAB

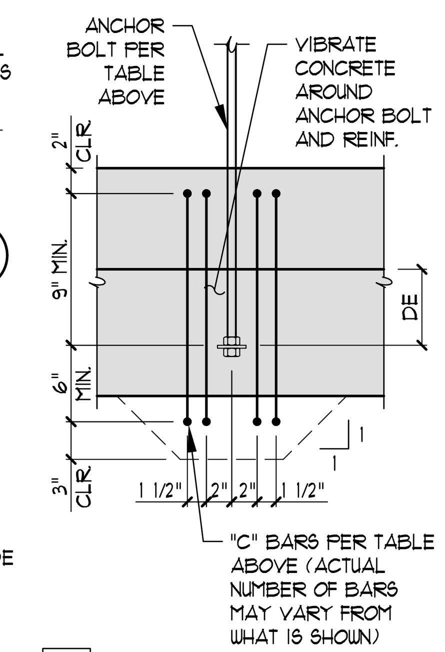

E ELEVATION

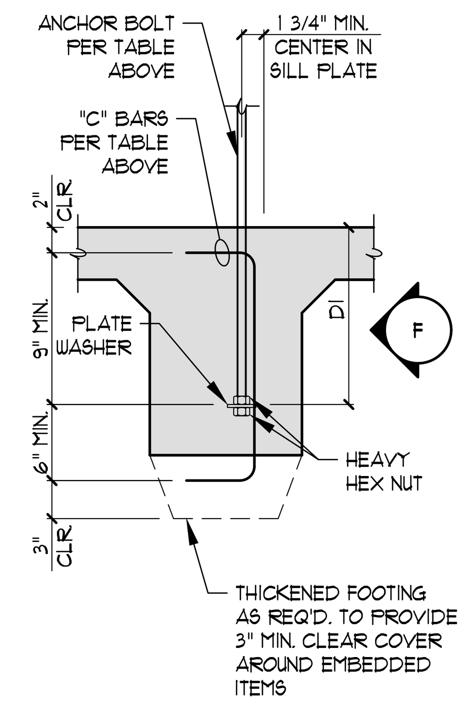

SECTION AT INTERIOR OF SLAB

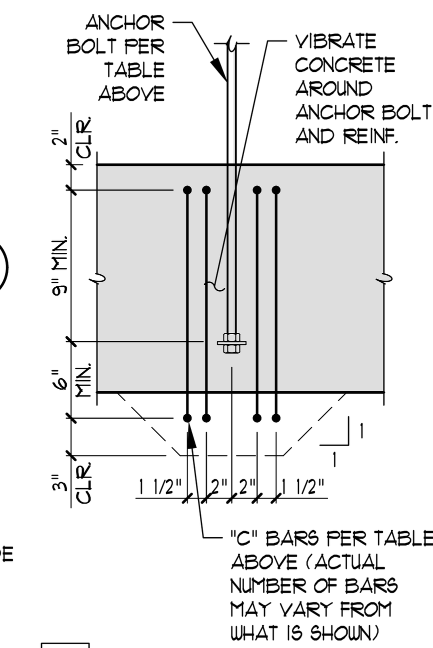

F ELEVATION

4. AS AN ALTERNATE TO THE ANCHORAGE REQUIREMENTS ABOVE, SSTB AND SB BOLTS CAN BE USED PER THE REQUIREMENTS BELOW:

SIMPSON ANCHOR BOLT OPTIONS (ESR-2611):

	SSTB ANCHOR BOLT (1) (SSTBL AT 3x AND 4x PLATE)		SB ANCHOR BOLT (1)	
SIMPSON HOLDOWN:	AT SLAB EDGE:	AT CURB:	AT SLAB EDGE:	AT CURB:
HDU2	SSTB16	SSTB24	SB5/8x24	SB5/8x24
HDU4	SSTB20	- - -	SB5/8x24	SB5/8x24
HDU5	SSTB24	- - -	SB5/8x24	SB5/8x24
HDU8	SSTB28	SSTB28	SB7/8x24	- - -
HDQ8	SSTB28	- - -	SB7/8x24	- - -
HDU11	- - -	- - -	SB1x30	SB1x30
HDU14	- - -	- - -	SB1x30 (2)	SB1x30 (2)
HHDQ11	- - -	- - -	SB1x30	SB1x30
HHDQ14	- - -	- - -	SB1x30 (2)	SB1x30 (2)

TABLE KEYNOTES (ONLY APPLY WHERE SPECIFICALLY NOTED IN TABLE ABOVE)

(1) ANY POUR JOINTS SHALL OCCUR AT LEAST 3" BELOW BOTTOM OF BOLT. IF POUR JOINT OCCURS ABOVE THIS POINT, ADD "C" BARS PER ALL THREAD ANCHOR BOLT OPTION TABLE ABOVE.

(2) 18" MIN. WIDE FOOTING. SEE DETAILS BELOW.

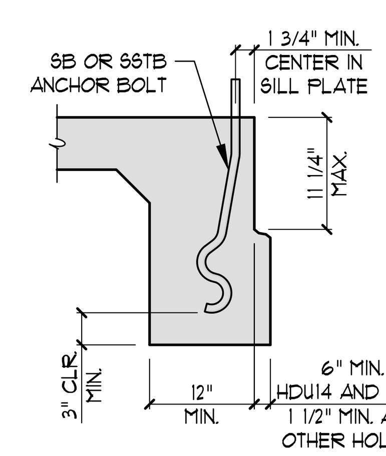

SLAB EDGE

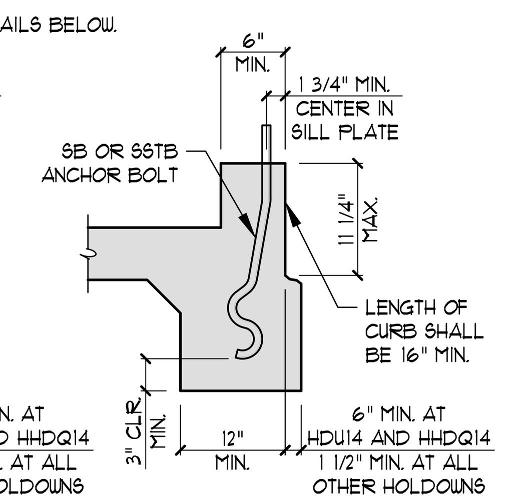

CURB

5. HOLDOWN ANCHORS MAY BE RETROFIT AS FOLLOWS. ALL-THREAD ROD, PLATE WASHER, AND NUTS SHALL BE GALVANIZED OR PAINTED WITH A ZINC RICH PAINT.

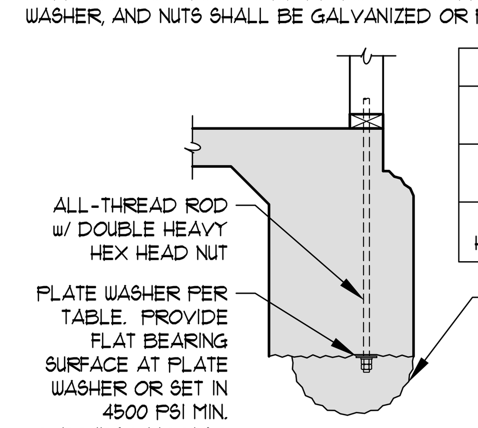

HOLDOWN	PLATE WASHER
HDU2, HDU4, HDU5	1/2"x3"x3"
HDQ8, HDU8, HDU11	5/8"x4"x4"
HHDQ11, HDU14, HHDQ14, HD12, HD19	3/4"x4 1/2"x4 1/2"

WRIGHT STRUCTURAL ENGINEERS
2 Venture, Suite 200
Irvine, CA 92618
phone (949) 477-4001
CA@wrightengineers.com
wrightengineers.com
ENGINEERED IN THE USA
Las Vegas | Orange County | Phoenix | Salt Lake City | Dallas

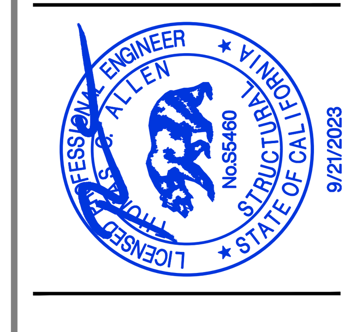

HELIOTROPE DUPLEX
407 Heliotrope Ave.
Corona Del Mar, CA 92625

COPYRIGHT (C) WRIGHT ENGINEERS. USE OF THIS DRAWING AND ANY REPRODUCTIONS SHALL BE RESTRICTED TO THE ORIGINAL SITE FOR WHICH IT WAS PREPARED. REPRODUCTION OR RE-USE OF THIS DRAWING FOR ANY OTHER PURPOSE IS STRICTLY PROHIBITED.

NUMBER	DATE	DESCRIPTION
1	09-21-2023	PLAN CHECK REVISIONS

DATE: May 25, 2023
DESIGN BY: RO
PROJECT MGR: RO
PROJECT NO: 220376

GENERAL STRUCTURAL NOTES (CONT'D.)

S0.2

S02-220376-G

GENERAL STRUCTURAL NOTES (CONT'D.)

N. STRUCTURAL OBSERVBATION

1. OBSERVATION SHALL BE PERFORMED BY THE STRUCTURAL ENGINEER (OR AN APPOINTED REPRESENTATIVE) AT EACH OF THE FOLLOWING STAGES. A LETTER REPORTING THE FINDINGS OF THE OBSERVATIONS SHALL BE PROVIDED TO THE CITY OF NEWPORT BEACH.

1.1. PRIOR TO FOUNDATION POUR TO OBSERVE STRUCTURAL HARDWARE LOCATIONS

1.2. AT COMPLETION OF FRAMING FOR GENERAL CONFORMANCE WITH THE APPROVED PLANS

CITY OF NEWPORT BEACH
COMMUNITY DEVELOPMENT DEPARTMENT | BUILDING DIVISION

STRUCTURAL OBSERVATION GENERAL NOTES

1. STRUCTURAL OBSERVATION IS REQUIRED FOR THIS PROJECT IN ACCORDANCE WITH CBC 1710. STRUCTURAL OBSERVATION IS THE VISUAL OBSERVATION OF THE STRUCTURAL SYSTEM BY A LICENSED DESIGN PROFESSIONAL FOR GENERAL CONFORMANCE TO THE APPROVED CONSTRUCTION DOCUMENTS.
2. STRUCTURAL OBSERVATION DOES NOT WAIVE THE RESPONSIBILITY FOR THE REQUIRED INSPECTIONS BY THE CITY OF NEWPORT BEACH.
3. THE OWNER SHALL EMPLOY A LICENSED DESIGN PROFESSIONAL TO PERFORM STRUCTURAL OBSERVATION SITE VISITS, AND TO ISSUE ALL STRUCTURAL OBSERVATION REPORTS.
4. THE DESIGN ENGINEER SHALL IDENTIFY THE REQUIRED STRUCTURAL OBSERVATION SITE VISITS ON THE STRUCTURAL OBSERVATION SCHEDULE.
5. THE REQUIRED SITE VISITS SHALL AT A MINIMUM INCLUDE THE FOLLOWING:
   A. OBSERVATION OF THE FOUNDATION SYSTEM PRIOR TO FINAL CONCRETE POUR;
   B. OBSERVATION OF BUILDING FRAMING PRIOR TO CALLING FOR THE CITY OF NEWPORT BEACH "COMPLETE FRAMING INSPECTION"; AND,
   C. FINAL OBSERVATION OF THE COMPLETED STRUCTURE.

   ADDITIONAL SITE VISITS MAY BE NEEDED AS DETERMINED BY THE DESIGN ENGINEER OR STRUCTURAL OBSERVER.
6. THE STRUCTURAL OBSERVER SHALL PREPARE A STRUCTURAL OBSERVATION REPORT FOR EACH STAGE OF CONSTRUCTION OBSERVED. THE CITY OF NEWPORT BEACH "STRUCTURAL OBSERVATION REPORT" FORM, OR A SIMILARLY FORMATTED REPORT, SHALL BE USED FOR ALL STRUCTURAL OBSERVATION REPORT.
7. IF THE CITY'S FORM IS NOT USED, REPORTS SHALL BE ON STRUCTURAL OBSERVER'S LETTERHEAD, STATE SITE ADDRESS, PLAN CHECK & PERMIT NUMBERS, STAGES & ELEMENTS OBSERVED, DATE OBSERVED, & COMPLETE CONTACT INFORMATION FOR STRUCTURAL OBSERVER.
8. ALL STRUCTURAL OBSERVATION REPORTS, REGARDLESS OF FORM USED, SHALL INCLUDE THE LICENSE STAMP & SIGNATURE OF THE STRUCTURAL OBSERVER RESPONSIBLE FOR THE PROJECT.
9. EACH STRUCTURAL OBSERVATION REPORT SHALL BE GIVEN TO THE OWNER OR OWNER'S REPRESENTATIVE, PROJECT CONTRACTOR, AND THE BUILDING INSPECTOR.
10. THE CONTRACTOR SHALL RESOLVE ALL DEFICIENCIES & THE FINAL STRUCTURAL OBSERVATION REPORT ISSUED PRIOR TO FINAL INSPECTION OR ACCEPTANCE OF STRUCTURAL WORK BY THE BUILDING INSPECTOR.
11. THE FINAL STRUCTURAL OBSERVATION REPORT SHALL STATE THAT THE STRUCTURAL SYSTEM CONFORMS TO THE APPROVED CONSTRUCTION DOCUMENTS & THAT ALL PREVIOUSLY OBSERVED DEFICIENCIES HAVE BEEN CORRECTED.
12. FINAL INSPECTION OR OTHER ACCEPTANCE OF THE STRUCTURAL SYS- TEM BY THE CHIEF BUILDING OFFICIAL, OR DESIGNEE, WILL NOT OCCUR UNTIL THE FINAL STRUCTURAL OBSERVATION REPORT IS RECEIVED.
13. THE LICENSED DESIGN PROFESSIONAL IN RESPONSIBLE CHARGE SHALL PREPARE ALL CONSTRUCTION DOCUMENT CHANGES RELATING TO THE STRUCTURAL SYSTEMS, REVIEW & APPROVAL OF SUCH CHANGES BY THE CHIEF BUILDING OFFICIAL, OR DESIGNEE, SHALL BE OBTAIN BY THE DESIGN PROFESSIONAL AND/OR CONTRACTOR PRIOR TO INSTALLATION AND/OR CONSTRUCTION OF SAID CHANGES.

STRUCTURAL OBSERVATION SCHEDULE

SITE ADDRESS: 407 HELIOTROPE AVE, CORONA DEL MAR, CA 92625 | **PC #:** PC2023-1312

TO BE COMPLETED BY THE DESIGN ENGINEER, AND INCLUDED ON THE CONSTRUCTION DRAWINGS.
BASED ON THE PROJECT SCOPE, PLEASE IDENTIFY THE ELEMENTS AND/OR CONNECTIONS THAT REQUIRE STRUCTURAL OBSERVATION. SPECIFY THE INTERVAL OR STAGE OF CONSTRUCTION WHEN THE STRUCTURAL OBSERVATION WILL BE PERFORMED.

TYPE	STRUCTURAL ELEMENTS AND/OR CONNECTIONS TO BE OBSERVED	SCHEDULED INTERVAL OR STAGE OF CONSTRUCTION
FOUNDATIONS	☑ FOOTINGS, SLAB FOUNDATION, ANCHORS	PRIOR TO FOUNDATION POUR.
	☐ MAT FOUNDATION, PRESTRESSED CONC. SLAB	
	☐ CAISSON, PILE, GRADE BEAM	
	☐ OTHER:	
SHEAR WALLS	☐ CONCRETE	
	☐ MASONRY	
	☑ WOOD OR MANUFACTURED SHEAR PANELS	AT COMPLETION OF STRUCTURAL FRAMING.
	☐ OTHER:	
FRAMES	☑ STEEL MOMENT OR BRACED FRAME	AT COMPLETION OF STRUCTURAL FRAMING.
	☐ CONCRETE MOMENT FRAME	
	☐ MASONRY WALL FRAME	
	☐ OTHER:	
DIAPHRAGMS	☐ CONCRETE	
	☐ STEEL DECK	
	☑ WOOD	AT COMPLETION OF STRUCTURAL FRAMING.
	☐ OTHER:	
FINAL	☑ FINAL OBSERVATION & REPORT	AT COMPLETION OF STRUCTURAL FRAMING.

FORMBSTRUCTURAL OBSERVATION GENERAL NOTES & SCHEDULE 10-2011

O. SPECIAL INSPECTION

1. IN ADDITION TO STANDARD INSPECTIONS BY THE BUILDING OFFICIAL REQUIRED PER CBC SECTION 110, THE OWNER SHALL EMPLOY ONE OR MORE SPECIAL INSPECTORS WHO SHALL PROVIDE INSPECTIONS DURING CONSTRUCTION FOR THE TYPES OF WORK LISTED IN THIS SECTION.
2. THE SPECIAL INSPECTOR SHALL BE A QUALIFIED PERSON WHO SHALL DEMONSTRATE COMPETENCE, TO THE SATISFACTION OF THE BUILDING OFFICIAL, FOR INSPECTION OF THE PARTICULAR TYPE OF CONSTRUCTION OR OPERATION REQUIRING SPECIAL INSPECTION.
3. THE CONTRACTOR SHALL BE RESPONSIBLE FOR PROVIDING THE SPECIAL INSPECTOR AT LEAST 24 HOURS NOTICE PRIOR TO PERFORMING ANY WORK REQUIRING SPECIAL INSPECTION.
4. THE SPECIAL INSPECTOR SHALL INSPECT THE WORK ASSIGNED FOR CONFORMANCE WITH THE APPROVED CONTRACT DRAWINGS AND SPEC'S. THE SPECIAL INSPECTOR SHALL FURNISH INSPECTION REPORTS TO THE BUILDING OFFICIAL, THE ENGINEER OF RECORD, AND OTHER DESIGNATED PERSONS. ALL DISCREPANCIES SHALL BE BROUGHT TO THE IMMEDIATE ATTENTION OF THE CONTRACTOR FOR CORRECTION, THEN, IF UNCORRECTED, TO THE ENGINEER AND THE BUILDING OFFICIAL. THE SPECIAL INSPECTOR SHALL SUBMIT A FINAL SIGNED REPORT STATING WHETHER THE WORK REQUIRING SPECIAL INSPECTION WAS, TO THE BEST OF THE INSPECTOR'S KNOWLEDGE, IN CONFORMANCE WITH THE APPROVED PLANS AND SPEC'S AND THE APPLICABLE CODE PROVISIONS.
5. INSPECTORS SHALL INSPECT FROM AN APPROVED SET OF CONTRACT DRAWINGS. SHOP DRAWINGS SHALL NOT BE USED IN LIEU OF THE APPROVED CONTRACT DRAWINGS FOR INSPECTION PURPOSES.
6. TYPES OF WORK TO BE INSPECTED BY THE SPECIAL INSPECTOR ARE AS FOLLOWS:

6.1. EPOXY ANCHORS IN CONCRETE - INSPECTION OF EPOXY ANCHORS IN CONCRETE SHALL BE PERIODIC, U.N.O. INSTALLATIONS SHALL BE PERFORMED BY QUALIFIED PERSONNEL TRAINED (BY MANUFACTURER) TO INSTALL ADHESIVE ANCHORS AND THEY SHALL FOLLOW THE MANUFACTURER'S PRINTED INSTALLATION INSTRUCTIONS (MPII). AT THE TIME OF INSTALLATION, THE CONCRETE SHALL HAVE ACHIEVED A MINIMUM AGE OF 28 DAYS, BE DRY, AND BE BETWEEN 50 DEGREES F AND 104 DEGREES F. THE HOLES SHALL BE DRILLED WITH A HAMMER DRILL TO THE DIMENSIONS LISTED IN THE MPII AND SHALL BE CLEANED USING THE BLOW-BRUSH-BLOW TECHNIQUE REQUIRED IN THE MPII. WHERE ANCHORS ARE INSTALLED INTO LIGHTWEIGHT CONCRETE, IT IS ASSUMED THAT THE CONCRETE IS CLASSIFIED AS ALL-LIGHTWEIGHT CONCRETE AS DEFINED IN ACI 318. ANY ADHESIVE ANCHORS INSTALLED HORIZONTALLY (EXCEPT FOR ANCHORS IN A SLAB-ON-GRADE) OR UPWARDLY INCLINED SHALL BE INSTALLED BY PERSONNEL WITH THE ACI/CRSI ADHESIVE ANCHOR INSTALLER CERTIFICATION PROGRAM, OR EQUIVALENT AND SHALL BE INSTALLED WITH CONTINUOUS SPECIAL INSPECTION.

6.2. SCREW ANCHORS AND EXPANSION ANCHORS IN CONCRETE OR MASONRY - SCREW ANCHORS AND EXPANSION ANCHORS SHALL BE INSTALLED WITH PERIODIC SPECIAL INSPECTION. INSTALLATIONS SHALL BE PERFORMED BY QUALIFIED PERSONNEL TRAINED (BY MANUFACTURER) TO INSTALL SCREW/EXPANSION ANCHORS AND THEY SHALL FOLLOW THE MANUFACTURER'S PRINTED INSTALLATION INSTRUCTIONS (MPII).

6.3. CONCRETE CONSTRUCTION PER CBC SECTION 1705.3 AND TABLE 1705.3.
EXCEPTION: SPECIAL INSPECTIONS SHALL NOT BE REQ'D. FOR:
1. ISOLATED SPREAD OR CONTINUOUS CONCRETE FOOTINGS SUPPORTING WALLS OF BUILDINGS (3) STORIES OR LESS IN HEIGHT WHOSE STRUCTURAL DESIGN IS BASED ON A 28 DAY DESIGN COMPRESSIVE STRENGTH, f'c, OF NO GREATER THAN 2500 PSI.
2. POST-TENSIONED SLABS ON GRADE WHERE EFFECTIVE PRESTRESS IN THE CONCRETE IS LESS THAN 150 PSI.

6.4. STEEL CONSTRUCTION AND WELDING PER CBC SECTION 1705.2 AND TABLE 1705.2.3.

6.5. WOOD CONSTRUCTION PER CBC 1705.5. INSPECTIONS SHALL BE PERIODIC.

6.6. INSTALLATION OF SSTB AND SB ANCHOR BOLTS AS REQ'D. PER ICC REPORT. INSPECTIONS SHALL BE PERIODIC.

7. CERTIFICATE OF APPROVAL REGARDING MATERIALS AND INSPECTION OF PREFABRICATED ITEMS SHALL BE PROVIDED IN ACCORDANCE WITH CBC SECTION 1704.

P. SUBMITTALS

1. SHOP DRAWINGS OR REPORTS FOR THE FOLLOWING ITEMS SHALL BE SUBMITTED TO THE STRUCTURAL ENGINEER OF RECORD PRIOR TO FABRICATION OR CONSTRUCTION (AS APPLICABLE) U.N.O.

   CONTRACTOR SUBMITTAL DOCUMENTS (WELDING) PER AISC 341, PART 1, APPENDIX Q
   GLULAM BEAMS
   MASONRY BLOCK TEST DATA
   REINFORCING STEEL
   STRUCTURAL STEEL

2. CONTRACTOR SHALL REVIEW AND STAMP SHOP DRAWINGS PRIOR TO SUBMITTING. CONTRACTOR'S REVIEW SHALL CHECK FOR COMPLETENESS/COMPLIANCE WITH CONTRACT DOCUMENTS.
3. SHOP DRAWINGS ARE REVIEWED BY ENGINEER ONLY FOR GENERAL COMPLIANCE WITH THE STRUCTURAL DRAWINGS. RESPONSIBILITY FOR CORRECTNESS SHALL REST WITH THE CONTRACTOR. SHOP DRAWINGS DO NOT SUPERSEDE OR REPLACE THE CONTRACT DRAWINGS OR SPECIFICATIONS. CHANGES, SUBSTITUTIONS, OR DEVIATIONS FROM CONTRACT DRAWINGS AND/OR SPECIFICATIONS WILL NOT BE ACCEPTED VIA SHOP DRAWING REVIEW. ALL SUCH MODIFICATIONS SHALL BE SUBMITTED SEPARATELY FOR ENGINEER'S REVIEW.
4. PREFABRICATED COMPONENTS, SPECIALTY ITEMS, OR DESIGN-BUILD ELEMENTS NOTED ON THE STRUCTURAL DRAWINGS, BUT WHICH REQUIRE THE MFR. OR SUPPLIER TO PROVIDE THE DESIGN, SHALL BE SUBMITTED BY THE CONTRACTOR TO THE ARCHITECT AND/OR ENGINEER FOR REVIEW AS A DEFERRED SUBMITTAL. DEFERRED SUBMITTALS REQ'D. BY THE STRUCTURAL ENGINEER OF RECORD SHALL INCLUDE, BUT NOT BE LIMITED TO, THE FOLLOWING:

   CONCRETE FORMWORK, SHORING, AND RESHORING
   CONCRETE MIX DESIGNS
   ENGINEERED WOOD JOISTS AND BEAMS
   MASONRY GROUT AND MORTAR MIX DESIGNS
   STAIRS, HANDRAILS, GUARDRAILS, AND THEIR COMPONENTS
   SUPPORT/ANCHORAGE OF MECH, ELECT, AND PLUMBING EQUIPMENT AND COMPONENTS

5. DEFERRED SUBMITTALS SHALL INCLUDE CALCULATIONS AND DRAWINGS PREPARED AND STAMPED BY AN APPROPRIATELY LICENSED ENGINEER (SPECIALTY ENGINEER) SHOWING LOCATION AND MAGNITUDE OF LOADS, CONFIGURATION AND SIZE OF MEMBERS, AND COMPATIBILITY OF SUBMITTAL ITEM WITH THE PRIMARY STRUCTURAL SYSTEM.
6. THE PURPOSE OF THE STRUCTURAL ENGINEER'S REVIEW OF DEFERRED SUBMITTALS SHALL BE LIMITED TO DETERMINING THAT THE DRAWINGS AND CALCULATIONS HAVE BEEN PROPERLY SEALED, THAT THE LOAD CRITERIA IS IN GENERAL CONFORMANCE WITH THE CONTRACT DOCUMENTS AND WITH THE REFERENCED BUILDING CODE, THAT CONNECTIONS TO THE PRIMARY STRUCTURE ARE COMPATIBLE WITH THE PRIMARY DESIGN, AND THAT THE PRIMARY STRUCTURE IS CAPABLE OF SUPPORTING THE IMPOSED LOADS.
7. THE STRUCTURAL ENGINEER WILL RELY UPON THE SPECIALTY ENGINEER'S SEAL AS CERTIFICATION THAT THE ITEMS DESIGNED BY THE SPECIALTY ENGINEER COMPLY WITH THE CRITERIA SET FORTH IN THE CONTRACT DOCUMENTS AND APPLICABLE CODES AND STANDARDS. THE STRUCTURAL ENGINEER SHALL NOT BE RESPONSIBLE FOR THE ADEQUACY OF DESIGNS PROVIDED BY OTHERS.
8. FOR ALL SUBMITTALS, ANY CORRECTIONS NOTED WILL BE MARKED ON ONE (1) COPY SET ONLY AND RETURNED. ADDITIONAL COPIES OF ANY SUBMITTAL WILL BE RETURNED UNMARKED. CONTRACTOR SHALL BE RESPONSIBLE FOR REPRODUCING ENGINEER'S CORRECTIONS ON ADDITIONAL COPIES REQ'D. ONE COPY SET MAY BE RETAINED FOR THE ENGINEER'S RECORDS. ALLOW FIVE (5) TO TEN (10) WORKING DAYS FOR THE ENGINEER'S REVIEW.
9. REFER TO APPLICABLE G.S.N. SECTIONS FOR FURTHER REQUIREMENTS SPECIFIC TO INDIVIDUAL SUBMITTALS.

WRIGHT STRUCTURAL ENGINEERS
ENGINEERED IN THE USA
2 Venture, Suite 200
Irvine, CA 92618
(949) 747-4001
CA@wrightengineers.com
wrightengineers.com
Las Vegas | Orange County | Phoenix | Salt Lake City | Dallas

LICENSED PROFESSIONAL ENGINEER ALLEN CALIFORNIA STRUCTURAL ENGINEER STATE OF CALIFORNIA
9/21/2023

HELIOTROPE DUPLEX
407 Heliotrope Ave.
Corona Del Mar, CA 92625

COPYRIGHT (C) WRIGHT ENGINEERS. USE OF THIS DRAWING AND ANY REPRODUCTIONS SHALL BE RESTRICTED TO THE ORIGINAL SITE FOR WHICH IT WAS PREPARED. REPRODUCTION OR RE-USE OF THIS DRAWING FOR ANY OTHER PURPOSE IS STRICTLY PROHIBITED.

NUMBER	DATE	DESCRIPTION
1	09-21-2023	PLAN CHECK REVISIONS

DATE: May 25, 2023
DESIGN BY: RO
PROJECT MGR: RO
PROJECT NO: 220376

GENERAL STRUCTURAL NOTES (CONT'D.)

S021-220376-G

S0.2.1

FOUNDATION PLAN NOTES

A. VERIFY ALL DIMENSIONS, ELEVATIONS, SLOPES, ETC., w/ ARCH'L. AND/OR CIVIL PRIOR TO CONSTRUCTION. RESOLVE DISCREPANCIES WITH ARCHITECT.

B. VERIFY LOCATION AND SIZE OF ALL INSERTS AND OPENINGS IN SLAB WITH ARCH'L., MECH., PLUMBING, AND ELECT. PRIOR TO CONSTRUCTION.

C. ALL EXTERIOR FOOTINGS SHALL BE EMBEDDED 24 INCHES MIN. BELOW EXTERIOR PAD GRADE AND ALL INTERIOR FOOTINGS (AS OCCUR) SHALL BE EMBEDDED 24 INCHES MIN. BELOW THE TOP OF SLAB. EXTERIOR PAD GRADE IS DEFINED AS LOWEST ADJACENT COMPACTED SUBGRADE (PAD GRADE BEFORE LANDSCAPING) OR NATURAL GRADE WITHIN 5 FEET OF BUILDING FOR PERIMETER FOOTINGS. CONTRACTOR SHALL COORDINATE FOOTING EMBEDMENT WITH CIVIL GRADING PLANS TO ENSURE THAT MINIMUM EMBEDMENT SPECIFIED ABOVE IS MAINTAINED.

D. FINISH FLOOR ELEVATION VARIES. SEE CIVIL DWGS.

E. T.O.F. ELEVATION AT STEEL OR CONCRETE COLUMNS = 1'-0" BELOW F.F. U.N.O.

F. F1, F2, F3, . . . DENOTES FOOTING PER SCHEDULE ON THIS SHEET. TYPICAL FOOTING SHALL BE MARK "F1" U.N.O. ON PLAN.

G. S_____S DENOTES FOOTING STEP PER TYPICAL DETAIL 10/S0.4.

H. SC1, SC2, SC3, . . . DENOTES STEEL COLUMN PER SCHEDULE ON THIS SHEET.

I. PLACE SLAB(S) ON GRADE OVER SUBGRADE AND VAPOR BARRIER (AS REQ'D.) PER THE GEOTECHNICAL REPORT REFERENCED ON G.S.N.

J. INTERIOR CONCRETE SLAB ON GRADE SHALL BE 7" THICK w/ #4 AT 12" o.c. EACH WAY. PLACE REINF. 3 1/2" CLR. FROM TOP OF SLAB.

K. INSTALL SLAB CONTROL JOINTS PER DETAIL 07/S0.4. MATCH CLOSURE POUR (WHERE PRESENT) CONTROL JOINTS WITH SLAB CONTROL JOINTS.

L. ANCHOR BOTTOM PLATE AT CONCRETE w/ 1/2" MIN. DIA. "J" BOLT w/ ROUND CUT WASHER AND NUT w/ 7" MIN. EMBEDMENT. PROVIDE MIN. (2) A.B. PER BOTTOM PLATE PIECE. LOCATE A.B. WITHIN 12" OF EACH END OF EACH PIECE. A.B. SPACING SHALL NOT EXCEED 48" o.c. AT LOAD-BEARING WALLS AND 72" o.c. AT INTERIOR NONLOAD-BEARING WALLS. HOLDOWN ANCHORS DO NOT COUNT AS REPLACING ANCHOR BOLTS. SEE SHEAR WALL SCHEDULE ON FRAMING PLAN FOR ADD'L. ANCHORAGE REQUIREMENTS AT SHEAR WALLS.

M. SEE G.S.N. FOR ANCHOR BOLT SUBSTITUTIONS AND HOLDOWN ANCHORAGE.

N. SEE ARCH'L. AND/OR CIVIL DWGS. FOR EXTERIOR SLABS, WALLS, ETC.

O. SEE DETAIL 06/S0.4 FOR PIPES/CONDUIT AT FTGS. PIPES/CONDUIT SHALL NOT PASS THRU NOR BE LOCATED BENEATH ISOLATED PAD FOOTINGS.

P. SW1, SW2, SW3, . . . DENOTES SHEAR WALL TYPE PER SCHEDULE ON THIS SHEET. ALL SHEAR WALLS SHALL BE CONSIDERED LOAD BEARING, U.N.O.

1 Q. DENOTES LOAD BEARING WALLS THAT MAY NOT APPEAR OBVIOUS.

FOOTING (F) SCHEDULE

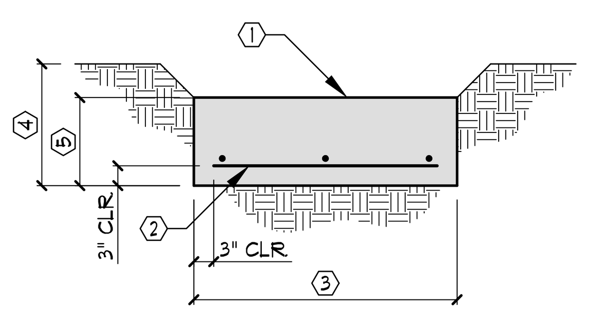

ISOLATED / CONTINUOUS FOOTING

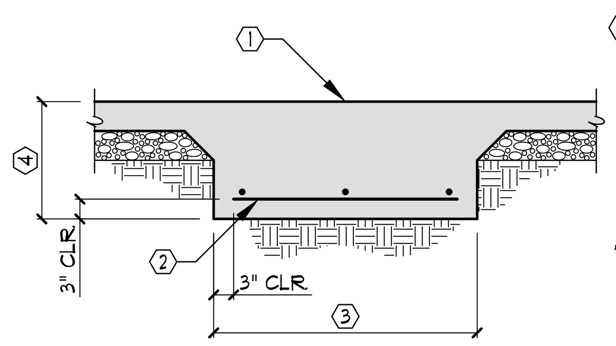

THICKENED SLAB FOOTING

1. SEE PLAN AND DETAILS FOR EMBEDDED ITEMS AND CONSTRUCTION ABOVE FOOTING
2. REBAR PER SCHEDULE
3. WIDTH / LENGTH PER SCHEDULE
4. THICKNESS PER SCHEDULE OR EMBEDMENT DEPTH PER FOUNDATION PLAN NOTES
5. THICKNESS PER SCHEDULE

A. REBAR IN CONTINUOUS FOOTINGS SHALL EXTEND THROUGH ISOLATED FOOTINGS WHERE BOTH FOOTINGS OCCUR AT THE SAME LOCATION

MARK	WIDTH	LENGTH	THICKNESS	FOOTING REBAR	NOTES
F1	1'-3"	CONT.	2'-0"	(2) #5 CONT. AT TOP & BOTTOM	-
F2	2'-6"	2'-6"	1'-6"	(3) #5 E. W., BOTTOM	-
F3	5'-0"	5'-0"	1'-6"	(6) #5 E.W., TOP & BOTTOM	-
F4	3'-6"	3'-6"	1'-6"	(5) #5 E. W., BOTTOM	-
F5	4'-3"	4'-3"	1'-6"	(6) #5 E. W., BOTTOM	-
F6	5'-3"	5'-3"	3'-0"	(7) #5 E.W., TOP & BOTTOM	-
F7	5'-3"	5'-3"	2'-6"	(7) #5 E.W., TOP & BOTTOM	-
F8	4'-4"	CONT.	2'-0"	(6) #5 CONT. AT TOP & BOTTOM	-
F9	2'-0"	CONT.	2'-0"	(3) #5 CONT. AT TOP & BOTTOM	-
F10	6'-3"	6'-3"	1'-6"	(8) #5 E.W., TOP & BOTTOM	-
F11	5'-3"	11'-0"	3'-0"	#5 AT 8" o.c. E.W, TOP & BOTTOM	-
F12	4'-6"	4'-6"	2'-0"	(4) #5 E.W, TOP & BOTTOM	-

SITE PLAN NOTES

A. VERIFY ALL DIMENSIONS, ELEVATIONS, SLOPES, ETC., w/ ARCH'L. AND/OR CIVIL PRIOR TO CONSTRUCTION. RESOLVE DISCREPANCIES WITH ARCHITECT.

B. VERIFY LOCATION AND SIZE OF ALL INSERTS AND OPENINGS IN SLAB WITH ARCH'L., MECH., PLUMBING, AND ELECT. PRIOR TO CONSTRUCTION.

C. ALL FOOTINGS SHALL EXTEND 24 INCHES MIN. BELOW PAD GRADE. PAD GRADE IS DEFINED AS TOP OF SLAB FOR INTERIOR FOOTINGS, LOWEST ADJACENT COMPACTED SUBGRADE (PAD GRADE BEFORE LANDSCAPING) OR NATURAL GRADE WITHIN 5 FEET OF BUILDING FOR PERIMETER FOOTINGS, OR TOP OF EXTERIOR PAVING OR CONCRETE WHERE EXTERIOR PAVING OR CONCRETE IS PERMANENTLY LOCATED DIRECTLY ADJACENT TO BUILDING AND EXTENDS AT LEAST 5 FEET FROM BUILDING. FOOTING EXCAVATIONS SHALL BE CLEAN AND FREE FROM LOOSE DEBRIS, STANDING WATER, OR UNCOMPACTED MATERIAL AT TIME OF CONCRETE PLACEMENT. CONTRACTOR SHALL COORDINATE FOOTING EMBEDMENT WITH CIVIL GRADING PLANS TO ENSURE THAT MINIMUM EMBEDMENT SPECIFIED ABOVE IS MAINTAINED.

D. DENOTES (N) SITE RETAINING WALL BY WRIGHT

E. REFER TO CIVIL PLANS FOR GRADING

F. ALL WALLS REQUIRE SPECIAL INSPECTION

G. S______S DENOTES STEP IN FOOTING PER DETAIL 10/S0.4

HANGER SCHEDULE

MARK	HANGER
H1	HUC66
H2	HUC46
H3	HU612/HUC612
H4	U414
H5	IUS3.56/9.5
H6	HHUS410
H7	HGUS7.25/10
H8	MIU3.56/11
H9	HHUS5.50/10
H10	HUC612, WELDED TO SC w/ (6) 1" SEGMENTS, PER MFR SPECS
H11	HUC410
H12	HUC410, WELDED TO SC w/ (4) 1" SEGMENTS, PER MFR SPECS
H13	IUS1.81/9.5
H14	HUC48
H15	HHUS7.25/10
H16	MIU3.56/9
H17	HUC412
H18	HUCQ412-SDS
H19	HUC66 WELDED TO SC w/ (4) 1" SEGMENTS, PER MFR SPECS
H20	HUCQ610-SDS
H21	LGU5.25-SDS
H22	LUC210Z
H23	HUC412, WELDED TO SC w/ (6) 1" SEGMENTS, PER MFR SPECS
H24	HUC412, INVERTED
H25	U66
H26	HUC88
H27	HUCQ412-SDS

STEEL COLUMN (SC) SCHEDULE

A. FOR BASE PLATE CONFIGURATION, A.R. PATTERN, AND COLUMN-TO-BASE PLATE CONNECTION, SEE TYPICAL COLUMN BASE PLATE SCHEDULE OR DETAIL.

B. STANDARD EFFECTIVE ANCHOR ROD EMBEDMENT = 7 1/2" U.N.O. EFFECTIVE EMBEDMENT SPECIFIED DENOTES MIN. DISTANCE REQ'D. BETWEEN T.O. CONCRETE AND T.O. EMBEDDED NUT U.N.O.

C. ORIENT LONG DIMENSION OF BASE PLATE PARALLEL TO WEB OF WIDE FLANGE COLUMN U.N.O.

MARK	SIZE	BASE PLATE	NOTES
SC1	HSS5x5x1/4	SEE DETAIL 255/S4.5	-
SC2	HSS5x5x1/4	TYPE A 3/4" x 12" x 1'-0" w/ (4) 3/4" DIA. A.R.	-
SC3	HSS6x4x1/4	SEE DETAIL 251/S4.4	-
SC4	HSS6x4x1/4	TYPE A 3/4" x 12" x 1'-0" w/ (4) 3/4" DIA. A.R.	-
SC5	HSS5x5x1/4	TYPE C 3/4" x 12" x 1'-0" w/ (4) 3/4" DIA. A.R.	-
SC6	HSS8x8x5/8	TYPE A 1" x 16" x 1'-4" w/ (4) 7/8" DIA. A.R.	-
SC7	HSS6x6x1/4	TYPE A 3/4" x 12" x 1'-0" w/ (4) 3/4" DIA. A.R.	-
SC8	HSS10x8x5/8	TYPE A 1" x 16" x 1'-4" w/ (4) 7/8" DIA. A.R.	-
SC9	HSS10x8x5/8	TYPE D 1" x 26" x 1'-4" w/ (4) 7/8" DIA. A.R.	-

JOIST (J) SCHEDULE

NOTE: JOISTS MAY BEAR DIRECTLY ON BEAMS, WALLS, ETC. OR MAY HANG PER SCHEDULE BELOW AT THE CONTRACTORS DISCRETION EXCEPT WHERE SHOWN SPECIFICALLY IN THE TYPICAL DETAILS.

MARK	JOIST SIZE	JOIST SPACING	HANGER
J1	11 7/8" TJI/210	16" o.c.	SEE G.S.N.
J2	(2) 11 7/8" TJI/230	19.2" o.c.	SEE G.S.N.
J3	9 1/2" TJI/210	12" o.c.	SEE G.S.N.
J4	(2) 9 1/2" TJI/230	16" o.c.	SEE G.S.N.
J5	1 3/4x11 7/8 LVL	12" o.c.	HUS1.81/10
J6	9 1/2" TJI/210	16" o.c.	SEE G.S.N.
J7	(2) 1 3/4x9 1/2 LVL	16" o.c.	BA3.56/9.5
J8	2x10	16" o.c.	LUS28

FRAMING PLAN NOTES

A. VERIFY ALL DIMENSIONS, ELEVATIONS, SLOPES, ETC., w/ ARCH'L. PRIOR TO CONSTRUCTION. RESOLVE DISCREPANCIES WITH ARCHITECT.

B. MISC. ITEMS SUCH AS STAIRS, LANDINGS, RAILINGS, MECH. EQUIPMENT ATTACHMENT TO PRIMARY STRUCTURAL FRAMING, ETC., SHALL BE DESIGNED BY OTHERS AND SUBMITTED FOR REVIEW AS DEFERRED SUBMITTALS PRIOR TO CONSTRUCTION. SEE G.S.N. FOR DEFERRED SUBMITTAL REQUIREMENTS.

C. DENOTES MOMENT CONNECTION PER DETAIL NOTED ON PLAN OR FRAME ELEVATION.

D. SC1, SC2, SC3, . . . DENOTES STEEL COLUMN PER SCHEDULE ON THIS SHEET.

E. WALL FRAMING, SHEAR WALLS, HEADERS, ETC., NOTED ON PLAN ARE FOR FRAMING BENEATH CURRENT PLAN LEVEL U.N.O.

F. EXTERIOR WALL FRAMING SHALL BE 2x6 STUDS AT 16" o.c. U.N.O. INTERIOR LOAD BEARING WALLS SHALL BE 2x4 AT 16" o.c. U.N.O.

G. DENOTES LOAD BEARING WALLS THAT MAY NOT APPEAR OBVIOUS.

H. KS DENOTES KING STUD. KP DENOTES KING POST. TS DENOTES TRIMMER STUD. TP DENOTES TRIMMER POST. ES DENOTES END STUD. EP DENOTES END POST. MINIMUM (1) KS AND (1) TS REQ'D. AT ALL OPENINGS. PROVIDE CONTINUOUS BEARING TO FOUNDATION FOR (2) TS OR GREATER. POSTS SUPPORTING FLUSH BEAM OR G.T. SHALL EXTEND TO UNDERSIDE OF BOTTOMMOST TOP PLATE OF WALL. DOUBLE TOP PLATE SHALL RUN CONTINUOUS OVER POST AT FLUSH BEAM OR G.T. UNLESS POST CAP IS SPECIFIED OR U.N.O. ON PLAN.

I. DOUBLE 2x TOP PLATE REQ'D. AT ALL BEARING WALLS. SPLICE PER DETAIL 16/S0.5.

J. SEE TYPICAL HOLE IN DOUBLE TOP PLATE DETAIL 17/S0.5 FOR PENETRATIONS THROUGH TOP PLATES AT LOAD BEARING WALLS.

K. SW1, SW2, SW3, . . . DENOTES SHEAR WALL TYPE PER SCHEDULE ON THIS SHEET. ALL SHEAR WALLS SHALL BE CONSIDERED LOAD BEARING U.N.O.

L. ROOF FRAMING MEMBERS SHOWN ON PLANS INDICATE 2x6 RAFTERS w/ SIMPSON U-TYPE HANGERS SPACED AT 24" o.c. MAX.

M. ALIGN (2) STUDS (MIN.) BENEATH ALL FLUSH BEAMS w/ WIDTH GREATER THAN 1 1/2" AT BEARING WALL. NAIL STUDS TOGETHER PER TYPICAL NAILING SCHEDULE. PROVIDE CONTINUOUS BEARING TO FOUNDATION FOR ALL BEAMS SUPPORTED BY (2) 2x OR LARGER POSTS.

N. J1, J2, J3, . . . DENOTES FLOOR JOIST PER SCHEDULE ON THIS SHEET. TYPICAL FLOOR JOIST SHALL BE MARK "J1" U.N.O. ON PLAN.

O. FLOOR SHEATHING AND FASTENERS SHALL BE AS FOLLOWS U.N.O. ON PLAN:
1. 3/4" T & G PLYWOOD PER G.S.N.
2. 10d AT 6" o.c. BOUNDARY FASTENERS (DIAPHRAGM BOUNDARIES, SHEAR PANEL BLOCKING, SOLID BLOCKING AND DRAG MEMBERS AS NOTED ON FRAMING DETAILS).
3. 10d AT 6" o.c. EDGE FASTENERS (AT SUPPORTED PANEL EDGES).
4. 10d AT 12" o.c. FIELD FASTENERS (ALONG INTERMEDIATE FRAMING MEMBERS).
5. ALT. FASTENERS: #8 x 2" MIN. ZINC COATED, FLAT/BUGLE HEAD SCREWS w/ SPACING NOTED ABOVE. SCREWS SHALL BE QUICK DRIVE WSNTL WOOD SCREWS (ICC ESR-1472).
6. HATCHED AREA INDICATES BLOCKED DIAPHRAGM w/ 10d AT 4" o.c. AT EDGES AND BOUNDARIES AND 12" o.c. FIELD U.N.O.

P. DECK SHEATHING AND FASTENERS SHALL BE AS FOLLOWS U.N.O. ON PLAN:
1. 1 1/8" T & G PLYWOOD PER G.S.N.
2. 10d AT 6" o.c. BOUNDARY FASTENERS (DIAPHRAGM BOUNDARIES, SHEAR PANEL BLOCKING, SOLID BLOCKING AND DRAG MEMBERS AS NOTED ON FRAMING DETAILS).
3. 10d AT 6" o.c. EDGE FASTENERS (AT SUPPORTED PANEL EDGES).
4. 10d AT 12" o.c. FIELD FASTENERS (ALONG INTERMEDIATE FRAMING MEMBERS).
5. ALT. FASTENERS: #8 x 2 1/2" MIN. ZINC COATED, FLAT/BUGLE HEAD SCREWS w/ SPACING NOTED ABOVE. SCREWS SHALL BE QUICK DRIVE WSNTL WOOD SCREWS (ICC ESR-1472).
6. HATCHED AREA INDICATES BLOCKED DIAPHRAGM w/ 10d AT 4" o.c. AT EDGES AND BOUNDARIES AND 12" o.c. FIELD U.N.O.

Q. ROOF SHEATHING AND FASTENERS SHALL BE AS FOLLOWS U.N.O. ON PLAN:
1. 15/32" PLYWOOD PER G.S.N.
2. 8d AT 6" o.c. BOUNDARY FASTENERS (DIAPHRAGM BOUNDARIES, SHEAR PANEL BLOCKING, SOLID BLOCKING AND DRAG MEMBERS AS NOTED ON FRAMING DETAILS).
3. 8d AT 6" o.c. EDGE FASTENERS (AT SUPPORTED PANEL EDGES).
4. 8d AT 12" o.c. FIELD FASTENERS (ALONG INTERMEDIATE FRAMING MEMBERS).
5. DO NOT USE STAPLES (EXCEPTION: STAPLES MAY BE USED TO FASTEN SHEATHING TO TRUSS TAILS AND FASCIA AT EXPOSED EAVE OVERHANGS).
6. HATCHED AREA INDICATES BLOCKED DIAPHRAGM w/ 8d AT 4" o.c. AT EDGES AND BOUNDARIES AND 12" o.c. FIELD U.N.O.

R. FASTENERS SHALL BE PLACED NOT LESS THAN 3/8" FROM PANEL EDGES AND SHALL BE FIRMLY DRIVEN INTO FRAMING MEMBERS. PANEL JOINT SHALL BE CENTERED ON FRAMING MEMBER. NO UNBLOCKED PANELS LESS THAN 24" WIDE SHALL BE USED. PROVIDE 1/8" GAP BETWEEN ROOF SHEATHING PANELS.

S. SHADED AREA DENOTES LOCATION OF OVERBUILD FRAMING PER TYPICAL DETAIL 313/S5.1.

SHEAR WALL (SW) SCHEDULE

A. ALL SHEAR WALL FRAMING SHALL BE 2x U.N.O. BOTTOM PLATES ON SHEAR WALLS SHALL BE 2x U.N.O. IN THIS SCHEDULE. FRAMING MAY BE WIDER THAN SPECIFIED.

B. PROVIDE (2) FULL HEIGHT END STUDS (MIN.) EACH END OF SHEAR WALL U.N.O. ON PLAN OR DETAILS. STITCH NAIL STUDS w/ (2) 16d AT 6" o.c. STAGGERED. AT MULTIPLE END STUDS, FASTEN w/ (2) 16d AT 4" o.c. STAGGERED, EACH MEMBER.

C. SHEAR WALL PANELS SHALL NOT BE LESS THAN 4 FT. x 8 FT. EXCEPT AT BOUNDARIES AND CHANGES IN FRAMING AND MAY BE INSTALLED EITHER HORIZ. OR VERT. U.N.O. ON PLAN OR WHERE SPECIFICALLY REQ'D. BY THE MFR. ALL PANEL EDGES SHALL BE CENTERED ON AND FASTENED DIRECTLY TO STUDS AND SOLID BLOCKING U.N.O. FASTENERS SHALL BE PLACED NOT LESS THAN 3/8" FROM PANEL EDGE AND SHALL BE FIRMLY DRIVEN INTO FRAMING MEMBERS. SUBSTITUTION OF ALT. NAILS OR STAPLES NOT PERMITTED w/o PRIOR WRITTEN APPROVAL OF EOR.

D. SHEAR WALL A.B. SIZE AND SPACING SHALL BE PER THIS SCHEDULE. SEE G.S.N. FOR ALLOWABLE A.B. SUBSTITUTIONS. ALL SHEAR WALL ANCHOR BOLTS AND BOLT-TYPE SUBSTITUTIONS SHALL HAVE A MIN. 0.229" x 3" x 3" PLATE WASHER (LARGER WASHER SIZE IS ACCEPTABLE). FOR PROPER WASHER PLACEMENT, SEE DETAIL BELOW. IF STANDARD CUT WASHER IS PLACED BETWEEN PLATE WASHER AND NUT, THE HOLE IN PLATE WASHER MAY BE DIAGONALLY SLOTTED UP TO 1-3/4" w/ WIDTH UP TO 3/16" LARGER THAN BOLT DIA.

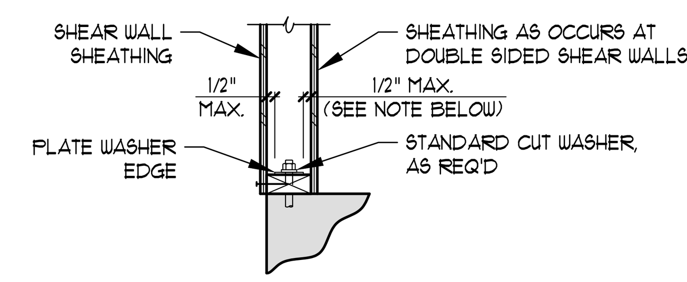

NOTE: AT DOUBLE SIDED SHEAR WALLS w/ FRAMING LARGER THAN 2x6, IT IS ACCEPTABLE TO STAGGER BOLTS SUCH THAT ONE HALF OF THE WASHERS ARE WITHIN 1/2" OF ONE FACE AND THE OTHER HALF ARE WITHIN 1/2" OF THE OTHER FACE.

E. SHEAR WALL LENGTHS NOTED ON PLAN ARE MINIMUM LENGTHS. WHERE "STK" SPECIFIED ON PLAN, MIN. SHEAR WALL LENGTH SHALL MATCH SHEAR WALL BELOW AND HOLDOWNS, WHERE SPECIFIED, SHALL BE FASTENED TO SHEAR WALL END STUDS/POSTS BELOW.

F. BOTTOM PLATE NAILS SHALL BE 16d COMMON OR 16d BOX. STAGGER BOTTOM PLATE FASTENERS AT ELEVATED SHEAR WALLS. SEE DETAIL 12/S0.5 FOR ALT. SHEAR TRANSFER AT ELEVATED SHEAR WALLS.

G. PROVIDE SOLID 2x BLOCKING AND EDGE NAILING AT EDGES OF EXHAUST VENT (8" x 8" MAX.) IN SHEAR WALL.

H. SEE DETAIL 20/S0.5 FOR FRAMING REQUIREMENTS AT ADJOINING SHEAR WALL PANEL EDGES.

I. ALL PLYWOOD SHEAR WALL SHEATHING SHALL BE INSTALLED PRIOR TO FRAMING PERPENDICULAR WALLS AND POPOUTS.

J. WHERE STAGGERED SIMPSON SDWS SCREWS ARE SPECIFIED, SEE DETAILS BELOW:

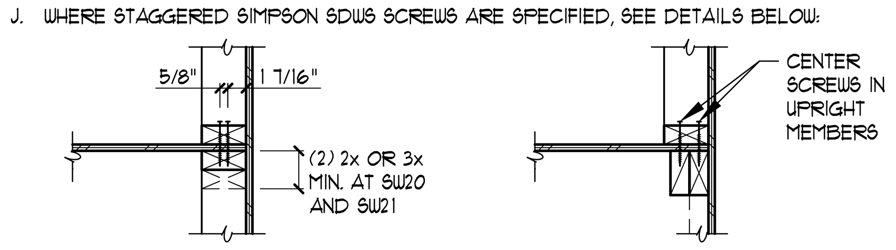

FLAT MEMBER BELOW PLYWOOD

UPRIGHT MEMBERS BELOW PLYWOOD

MARK	SHEATHING MATERIAL	EDGE NAILING	FIELD NAILING	BOTTOM PLATE A.B. AT CONC.	BOTTOM PLATE NAIL AT WOOD
SW9	3/8" PLYWD. ONE SIDE OF WALL	8d AT 6" o.c.	8d AT 12" o.c.	1/2" DIA. A.B. AT 33" o.c.	16d AT 4" o.c.
SW11	3/8" PLYWD. ONE SIDE OF WALL	8d AT 4" o.c.	8d AT 12" o.c.	1/2" DIA. A.B. AT 23" o.c.	16d AT 3" o.c.
SW13	3/8" PLYWD. ONE SIDE OF WALL. 3x FRAMING AT ADJOINING PANEL EDGES	8d AT 3" o.c. STAGGER AT BOTTOM PLATE & ADJOINING PANEL EDGES	8d AT 12" o.c.	1/2" DIA. A.B. AT 18" o.c.	16d AT 2" o.c.
SW16	15/32" PLYWD. ONE SIDE OF WALL. 3x FRAMING AT ADJOINING PANEL EDGES	10d AT 3" o.c. STAGGER AT BOTTOM PLATE & ADJOINING PANEL EDGES	10d AT 12" o.c.	1/2" DIA. A.B. AT 14" o.c.	16d AT 2" o.c.
SW17	15/32" PLYWD. ONE SIDE OF WALL. 3x FRAMING AT ADJOINING PANEL EDGES	10d AT 2" o.c. STAGGER AT BOTTOM PLATE & ADJOINING PANEL EDGES	10d AT 12" o.c.	1/2" DIA. A.B. AT 11" o.c.	SDWS22400DB SCREWS AT 4" o.c. STAGGERED
SW18	15/32" STRUCT. I PLYWD. ONE SIDE OF WALL. 3x FRAMING AT ADJOINING PANEL EDGES	10d AT 2" o.c. STAGGER AT BOTTOM PLATE & ADJOINING PANEL EDGES	10d AT 12" o.c.	1/2" DIA. A.B. AT 10" o.c. (2 MIN.)	SDWS22400DB SCREWS AT 4" o.c. STAGGERED
SW20	15/32" PLYWD. BOTH SIDES OF WALL. OFFSET VERTICAL PANEL JOINTS TO FALL ON DIFFERENT STUDS. 3x FRAMING AT ADJOINING PANEL EDGES	10d AT 2" o.c. STAGGER AT BOTTOM PLATE & ADJOINING PANEL EDGES	10d AT 12" o.c.	1/2" DIA. A.B. AT 6" o.c. (2 MIN.) (BOTTOM PLATE MUST BE 3x)	SDWS22600DB SCREWS AT 1 1/2" o.c. STAGGERED (BOTTOM PLATE MUST BE 3x)

Signed 10/25/2023

REVIEW IS SUBJECT
TO THE LIMITATIONS
STATED IN THE REPORT DATED
5-5-2022, FILE NO: 8677-10
REPORT NO: R1-8677
R MCCARTHY CONSULTING, INC.

WRIGHT
STRUCTURAL ENGINEERS
ENGINEERED IN THE USA
2 Venture, Suite 200
Irvine, CA 92618
phone (949) 477-4001
CA@wrightengineers.com
wrightengineers.com
Las Vegas | Orange County | Phoenix | Salt Lake City | Dallas

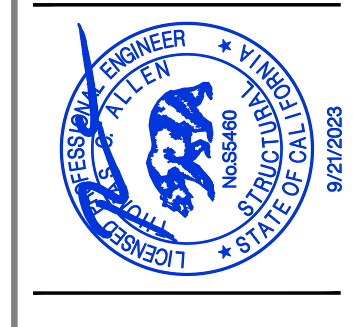

HELIOTROPE DUPLEX
407 Heliotrope Ave.
Corona Del Mar, CA 92625

COPYRIGHT (C) WRIGHT ENGINEERS. USE OF THIS DRAWING AND ANY REPRODUCTIONS SHALL BE RESTRICTED TO THE ORIGINAL SITE FOR WHICH IT WAS PREPARED. REPRODUCTION OR RE-USE OF THIS DRAWING FOR ANY OTHER PURPOSE IS STRICTLY PROHIBITED.

NUMBER	DATE	DESCRIPTION
1	09-21-2023	PLAN CHECK REVISIONS

DATE: May 25, 2023
DESIGN BY: RO
PROJECT MGR: RO
PROJECT NO: 220376

SCHEDULES AND NOTES

S03-220376-SH

S0.3

REVIEW IS SUBJECT
TO THE LIMITATIONS
STATED IN THE REPORT DATED
5-5-2022, FILE NO: 8677-10
REPORT NO: R1-8677
R MCCARTHY CONSULTING, INC.

Signed 10/25/2023

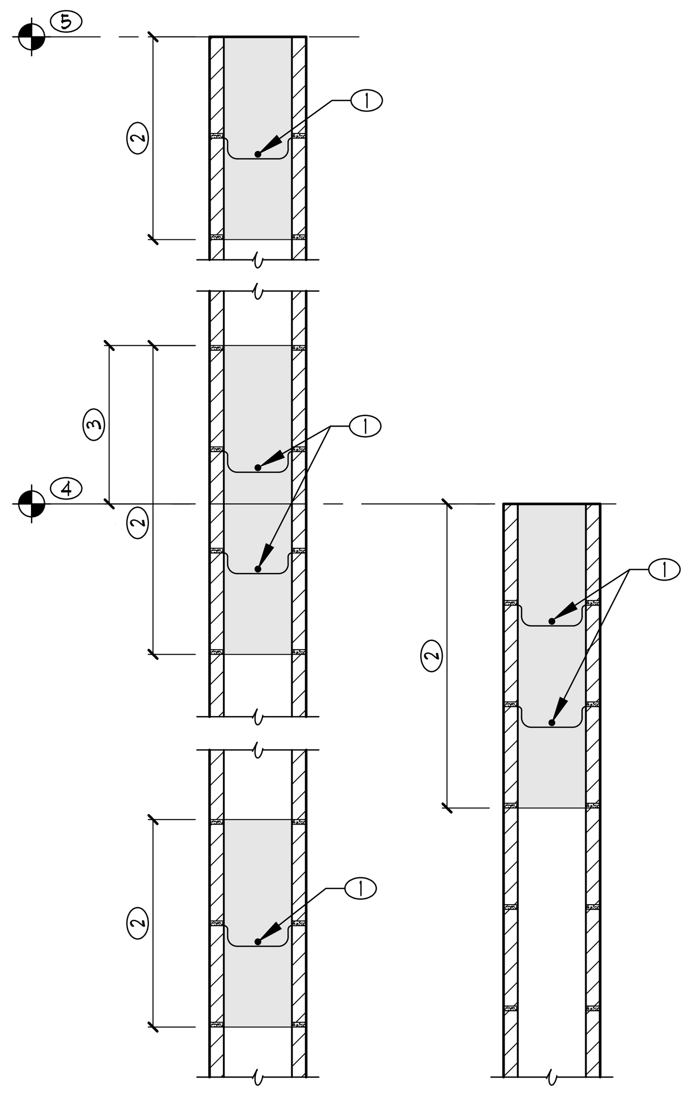

PARAPET WALL   NON-PARAPET WALL

1. HORIZONTAL REINFORCING PER PLAN OR G.S.N.
2. GROUT DEPTH PER PLAN OR G.S.N. CENTER REINFORCING AT APPROXIMATE CENTER OF GROUT
3. GROUT 8" MIN. ABOVE ELEVATED FLOOR OR ROOF LINE
4. ELEVATED FLOOR OR ROOF LINE
5. TOP OF PARAPET

08 TYPICAL HORIZONTAL REINFORCING

M01-02 080304 NO SCALE

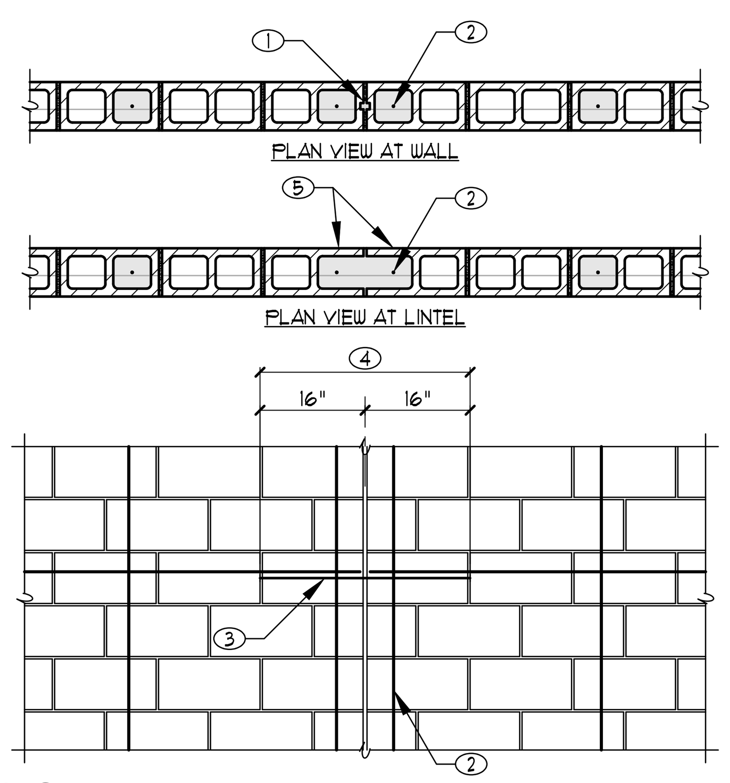

PLAN VIEW AT WALL

PLAN VIEW AT LINTEL

1. FILLER MATERIAL PER ARCH'L
2. VERTICAL REINFORCING EACH SIDE OF C.J.
3. 1/2" DIA. x 32" LONG SMOOTH ROD AT EACH HORIZONTAL REINFORCING BAR. GREASE BOTH ENDS
4. STOP TYPICAL HORIZONTAL REINFORCING AT CONTROL JOINTS. ONLY HORIZONTAL REINFORCING AT THE FLOOR LINE, ROOF LINE AND TOP OF WALL TO RUN THROUGH THE CONTROL JOINT
5. OPEN END BLOCK BACK TO BACK

A. LOCATE CONTROL JOINTS WHERE SHOWN ON PLAN. WHERE NOT SPECIFICALLY NOTED ON PLAN, LOCATE AT 24'-0" MAX. o.c. VERIFY LOCATION COMPATIBILITY WITH ARCH'L. PRIOR TO PLACEMENT

B. CONTROL JOINTS IN LINTELS SHALL BE LOCATED AT MID-SPAN U.N.O. LINTEL REINFORCING AT BOTTOM OF LINTEL TO BE CONTINUOUS THROUGH CONTROL JOINT

09 TYPICAL MASONRY CONTROL JOINT (MCJ)

M01-01 181204 NO SCALE

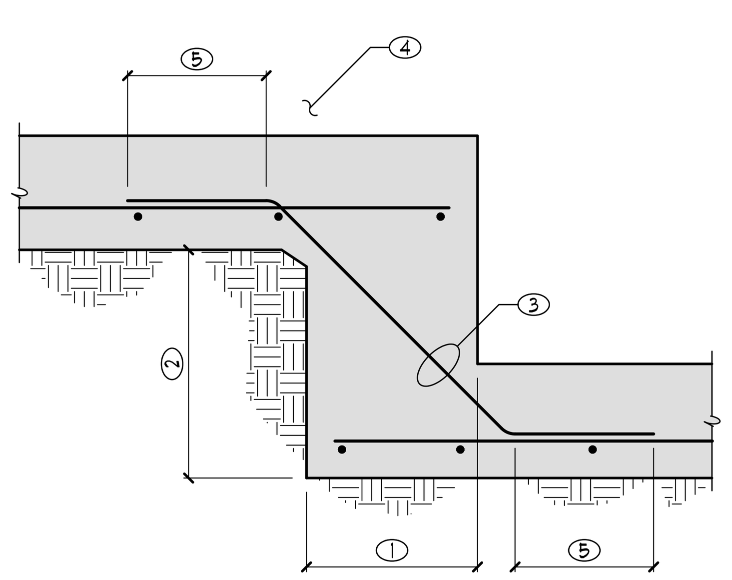

1. WIDTH EQUAL TO FOOTING THICKNESS OR 18", WHICHEVER IS GREATER
2. WHERE STEP EXCEEDS 48", USE MULTIPLE STEPS
3. SLOPED REINFORCING AT STEP TO MATCH AND LAP WITH LONGITUDINAL BARS
4. WALL ABOVE AS OCCURS NOT SHOWN FOR CLARITY
5. LAP PER TYPICAL REBAR LAP SCHEDULE (WHERE PRESENT)

10 TYPICAL STEPPED FOOTING

F01-06 070914 NO SCALE

4. CLEARANCE EQUAL TO SLEEVE DIA. (6" MIN.)
5. NO TRENCH EXCAVATION ALLOWED BELOW THIS LINE
6. LINE OF SLAB BEYOND

1. PIPE/CONDUIT
2. SLEEVE. SIZE TO PROVIDE 1/2" MIN. CLEARANCE AROUND UTILITY PIPE/CONDUIT
3. LEAN CONCRETE FILL. MATCH WIDTH OF FOOTING

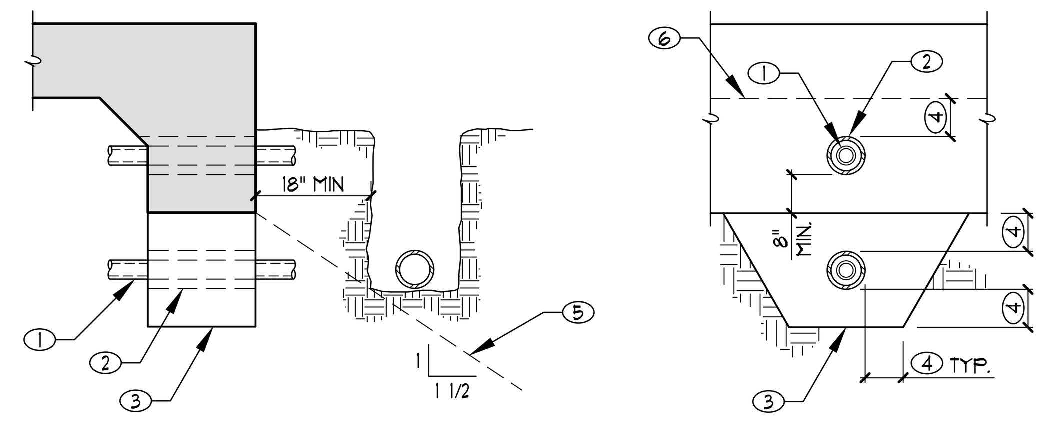

SECTION   ELEVATION

06 PIPE/CONDUIT AT TURNED DOWN SLAB EDGE

F01-01B 080513 NO SCALE

C. WHERE COLUMN LINES ARE NOT PRESENT, SPACING OF DOWELED CONTROL JOINTS AS SHOWN IN SECTION "A" SHALL NOT EXCEED 120 x SLAB THICKNESS OR 50', WHICHEVER IS LESS. BAY LENGTH TO WIDTH RATIO SHALL NOT EXCEED 1.5. PROVIDE SAW-CUT CONTROL JOINTS BETWEEN DOWELED JOINTS AT MAX. SPACING NOTED IN SCHEDULE

D. WHERE SLAB IS UNREINFORCED OR CONTAINS ONLY FIBER REINF. PER G.S.N., ALL CONTROL JOINTS SHALL BE MADE PER SECTION "A"

DOWEL SCHEDULE				
SLAB THICKNESS	DOWEL DIMENSIONS		MAX. o.c. SPACING	
	RECT.	ROUND	RECT.	ROUND
4" TO 6"	3/8" x 2" x 12"	3/4" DIA. x 14"	24"	24"
7" TO 8"	1/2" x 2 1/2" x 12"	1" DIA. x 16"	24"	24"
9" TO 11"	3/4" x 2 1/2" x 12"	1 1/4" DIA. x 18"	24"	24"

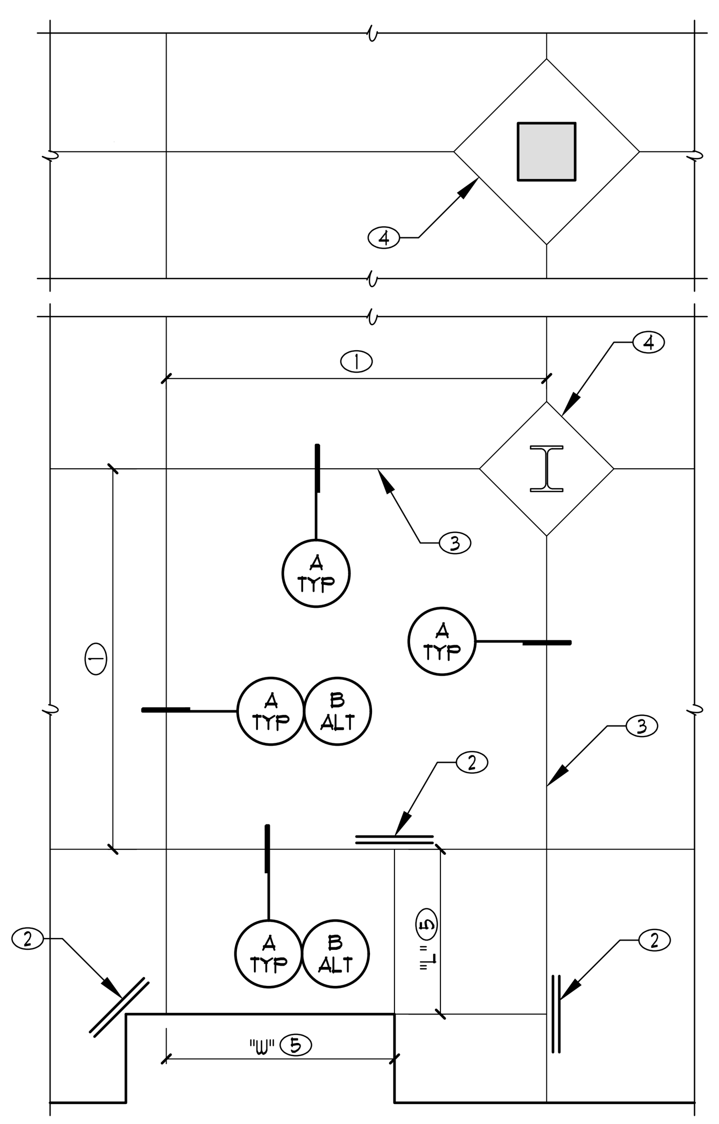

TYPICAL CONTROL JOINT LAYOUT

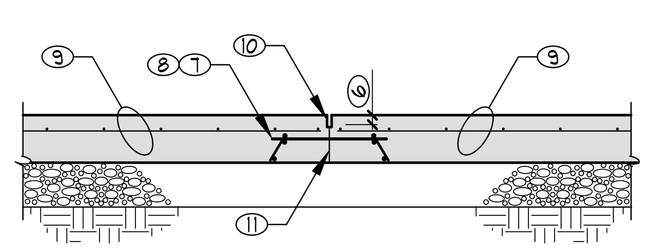

A DOWELED CONTROL JOINT AT COLUMN LINES / CONSTRUCTION JOINTS

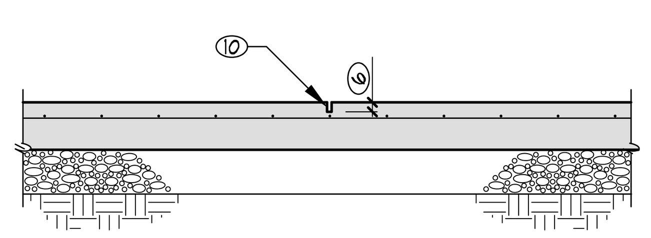

B SAW-CUT CONTROL JOINT

1. JOINTS TO BE EQUALLY SPACED BETWEEN COLUMN LINES EACH DIRECTION NOT TO EXCEED MAX. SPACING PER SCHEDULE

JOINT SPACING SCHEDULE	
SLAB THICKNESS	MAX. SPACING
4"	11'
5"	13'
6"	14'
7"	16'
8"	17'
9"	18'
10"	20'
11"	21'

2. PLACE (2) #4 x 48" BARS AT MID-HEIGHT OF SLAB ADJACENT TO ALL DISCONTINUOUS JOINT LOCATIONS. CENTER ON JOINT
3. ALIGN CONTROL JOINT IN EACH DIRECTION w/ COLUMN, TYP. AT INTERIOR COLUMNS. AT EDGE COLUMNS, ALIGN CONTROL JOINT IN DIRECTION PERPENDICULAR TO SLAB EDGE
4. COLUMN ISOLATION JOINT PER TYPICAL DETAIL
5. WHERE CONTROL JOINT SECTIONS ARE RECTANGULAR, WIDTH "W" SHALL NOT EXCEED 1.5 TIMES LENGTH "L"
6. DEPTH EQUAL TO 1/4 SLAB THICKNESS
7. RECTANGULAR PLATE DOWEL (PREFERRED) OR SMOOTH ROUND DOWEL (PERMITTED ALTERNATE) PER G.S.N. w/ SIZE AND SPACING PER SCHEDULE. CENTER ACROSS JOINT AT MID-HEIGHT OF SLAB. FOR PLATE DOWELS, INSTALL DOWELS AND CLIPS PER MFR.'S RECOMMENDATIONS. FOR ROUND DOWELS, APPLY THIN BOND BREAKER COATING FULL LENGTH OF DOWEL
8. DOWELS SHALL BE PERPENDICULAR TO CONTROL JOINT AND PLACED 6" CLR. MIN. (PLATE DOWELS) OR 12" CLR. MIN. (ROUND DOWELS) FROM JOINT INTERSECTIONS. DOWEL BASKETS SHALL BE USED TO MAINTAIN ALIGNMENT OF DOWELS WHILE CONCRETE IS POURED (USE DOWEL ALIGNERS AT CONSTRUCTION JOINTS)
9. STOP SLAB REINF. (AS OCCURS) EACH SIDE OF JOINT. SUPPORT OF TYP. SLAB REINF. SHALL BE INDEPENDENT FROM DOWELS
10. SAW-CUT JOINT. SAW CUT SHALL BE MADE w/ EARLY ENTRY SAW SOON ENOUGH TO PREVENT SHRINKAGE CRACKING, BUT NOT SO SOON AS TO CAUSE SPALLING
11. CONSTRUCTION JOINT NEED ONLY OCCUR AT EXPOSED EDGES OF DISCONTINUOUS SLAB PLACEMENT U.N.O. APPLY BOND BREAKER TO JOINT PRIOR TO SECOND POUR (DO NOT ROUGHEN JOINT). IF CONSTRUCTION JOINT IS TO BE FILLED, TOOL TOP EDGE TO 1/8" MAX. RADIUS AND SAW CUT JOINT TO A DEPTH OF 1"

A. TOOLED JOINT OF EQUIVALENT DEPTH MAY BE USED IN LIEU OF SAW-CUT JOINT

B. AS AN ALTERNATE TO RECTANGULAR PLATE DOWELS SPECIFIED ABOVE, USE PNA'S PD3 TAPERED PLATE DOWELS OF EQUIVALENT SIZE SPACED AT 27" o.c. MAX. INSTALL BASKET ASSEMBLIES PER MFR.'S RECOMMENDATIONS

07 TYPICAL CONTROL JOINTS IN SLAB ON GRADE

F01-26 080508 NO SCALE

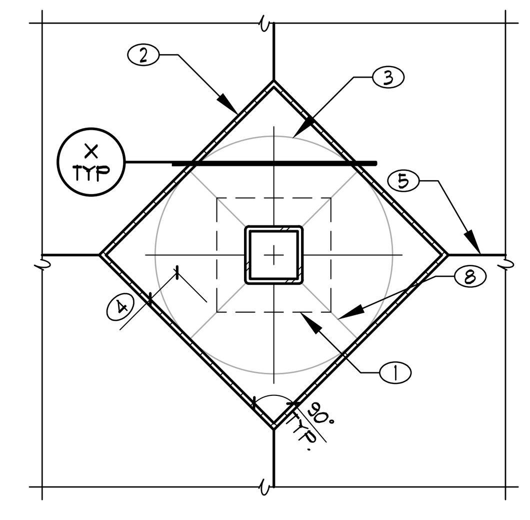

A AT INTERIOR COLUMN

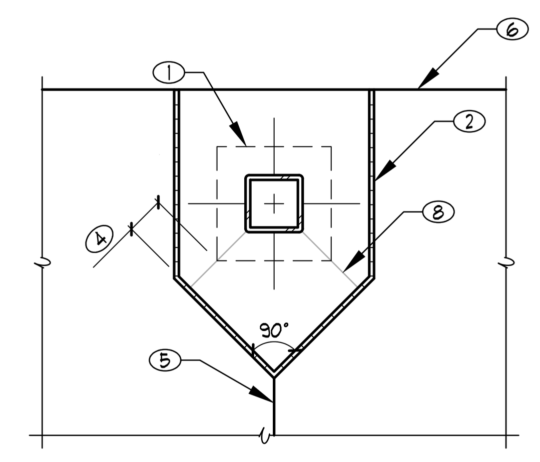

B AT EDGE COLUMN

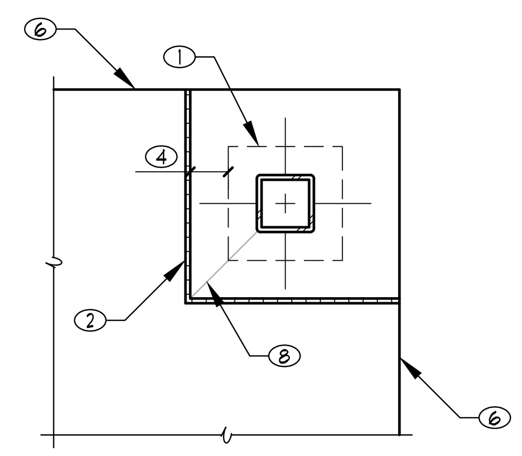

C AT CORNER COLUMN

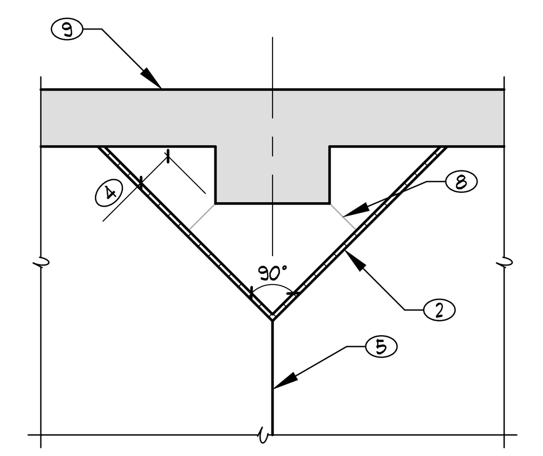

D AT THICKENED PILASTER

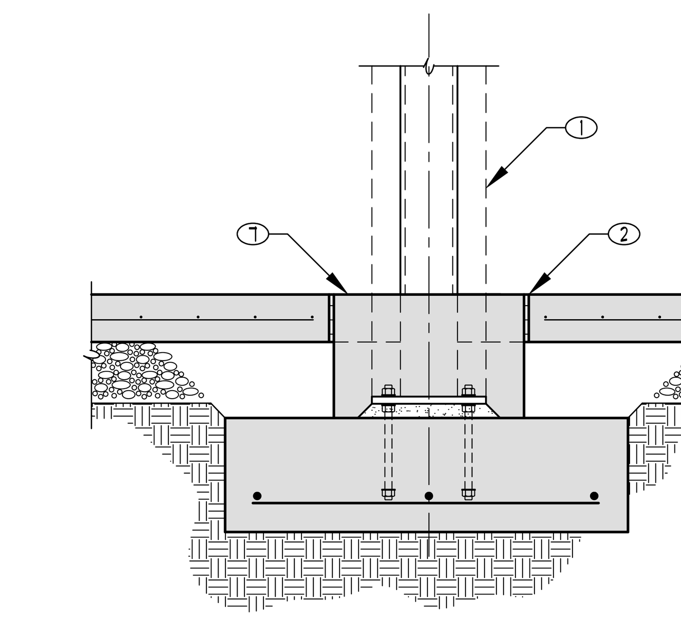

X SECTION

1. EDGE OF STEEL BASE PLATE OR FACE OF CONCRETE COLUMN AS OCCURS, TYP.
2. COLUMN ISOLATION JOINT w/ PREFORMED JOINT FILLER. FILL TOP OF JOINT w/ ELASTOMERIC JOINT SEALANT AS REQ'D. PER ARCH'L.
3. ISOLATION JOINT MAY BE CIRCULAR IN LIEU OF DIAMOND AND RECTANGULAR SHAPES SHOWN, TYP. AT INTERIOR, EDGE, AND CORNER COLUMNS
4. 4" MIN. CLR., TYP.
5. CONSTRUCTION JOINT OR CONTROL JOINT PER "TYPICAL CONTROL JOINTS IN SLAB ON GRADE" DETAIL, TYP.
6. SLAB EDGE
7. PLACE CLOSURE POUR AFTER COMPLETION OF STRUCTURAL FRAMING ABOVE (i.e., ELEVATED FLOOR/ ROOF FRAMING, ELEVATED SLABS AND DECKS, ETC.)
8. WHERE SLAB ON GRADE IS TO BE EXPOSED, PROVIDE TOOLED OR SAW-CUT JOINT IN CLOSURE POUR AT CORNERS OF COLUMN WHERE SHOWN. JOINT DEPTH SHALL BE 1/4 TYP. SLAB THICKNESS
9. CONCRETE OR MASONRY WALL

A. SEE APPLICABLE FOUNDATION DETAILS FOR COLUMN TO FOOTING CONNECTIONS

B. STEEL COLUMN SHOWN IS SCHEMATIC ONLY. SEE PLAN AND APPLICABLE COLUMN SCHEDULE FOR ACTUAL COLUMN MATERIAL, SECTION, ETC.

04 TYPICAL COLUMN ISOLATION JOINTS – PLAN

F01-29 080508 NO SCALE

1. STEEL COLUMN PER PLAN
2. WALL PER PLAN
3. 2x NAILER
4. 3/4" THREADED WELDED STUD AT 32" o.c.

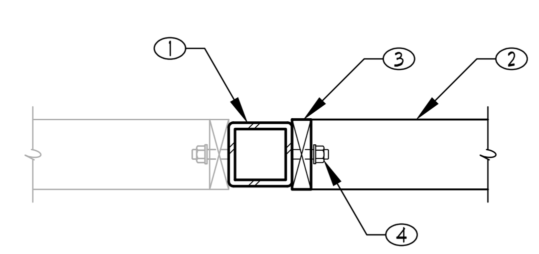

05 TYPICAL WOOD NAILER AT STEEL COLUMN – PLAN VIEW

05-220376 070911 NO SCALE

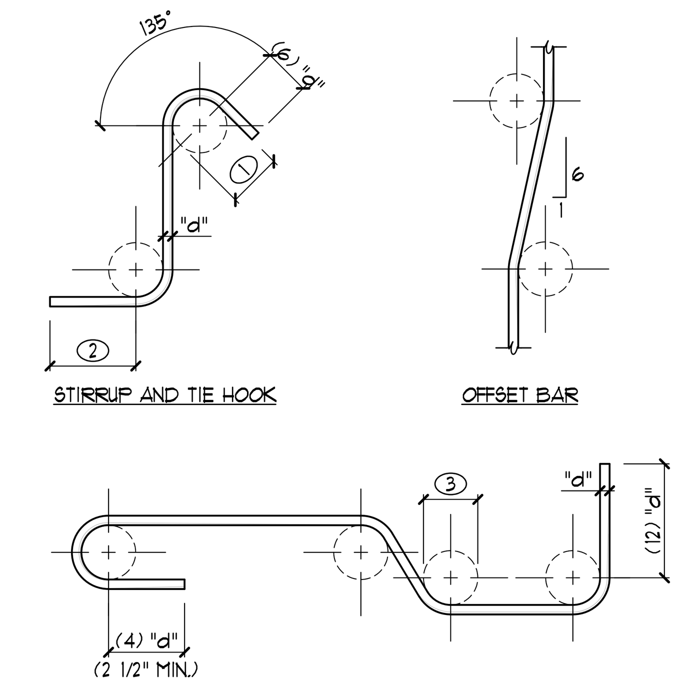

STIRRUP AND TIE HOOK   OFFSET BAR

ALL OTHER REINFORCING

1. MINIMUM FINISHED BEND DIA. FOR STIRRUPS AND TIES ONLY (4) "d" FOR #5 BAR AND SMALLER, (6) "d" FOR #6 THRU #8. TYPICAL
2. (6) "d" FOR #5 AND SMALLER (12) "d" FOR #6 THRU #8
3. MINIMUM FINISHED BEND DIA. FOR ALL REINFORCING EXCEPT STIRRUPS AND TIES (6) "d" UP TO #8 BAR, (8) "d" FOR #9 THRU #11, (12) "d" FOR #14 AND #18.

A. "d" = BAR DIA.

B. ALL REINFORCEMENT SHALL BE BENT COLD UNLESS NOTED OTHERWISE ON PLANS OR DETAILS

C. REINFORCING PARTIALLY EMBEDDED IN CONCRETE SHALL NOT BE FIELD BENT UNLESS SPECIFICALLY NOTED ON PLANS OR DETAILS

01 STANDARD REBAR BEND DETAIL

C01-01 200729 NO SCALE

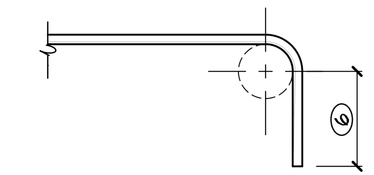

HOOK LENGTH

A. ALL TABULATED VALUES ARE IN UNITS OF INCHES U.N.O.

B. CONCRETE STRENGTHS SHOWN ARE FOR DESIGN PURPOSES ONLY. SEE G.S.N. FOR ACTUAL CONCRETE SPECIFICATIONS

BAR SIZE	CONCRETE (f'c 2500 PSI w/ 1 1/2" MIN. CLR.)				MASONRY		
	MIN. SPACING (1)	TOP BARS (2)	OTHER BARS	STANDARD HOOK LENGTH	EDGE BARS (4)	CENTER BARS (5) 8" CMU	CENTER BARS (5) 6" CMU
#3	2	18	14	4 1/2	13	12	12
#4	2 1/2	24	19	6	22	13	18
#5	3 1/4	30	23	7 1/2	35	20	28
#6	3 3/4	37	28	9	54	38	53
#7	4	60	46	10 1/2	(3)	(3)	-
#8	4	76	59	12	(3)	(3)	-
#9	4 1/4	94	72	13 1/2	(3)	(3)	-

1. BAR SPACING IS MEASURED AS CENTER TO CENTER BAR SPACING. NOTIFY ENGINEER WHERE BAR SPACING IS LESS THAN MIN SPACING NOTED IN SCHEDULE
2. TOP BARS ARE HORIZONTAL BARS SO PLACED THAT 12 INCHES OR MORE OF FRESH CONCRETE IS CAST IN MEMBER BELOW SPLICE
3. MECHANICAL SPLICE COUPLER PER G.S.N. REQUIRED
4. USE EDGE BAR LAP LENGTHS FOR BARS NOT MEETING CENTER BAR CRITERIA AND WHERE CLR. COVER TO END OF WALL IS LESS THAN CLR. COVER TO FACE OF WALL
5. CENTER BARS ARE BARS PLACED AT MID-THICKNESS OF CMU. BARS NOT PLACED AT MID-THICKNESS BUT HAVING CLR. COVER TO EACH FACE OF MASONRY WALL OF AT LEAST 5 x BAR DIA. MAY ALSO USE CENTER BAR LAP LENGTHS
6. STANDARD HOOK LENGTH REFER TO STANDARD REBAR BEND DETAIL FOR MORE INFORMATION

02 TYPICAL REBAR LAP SCHEDULE

SCH02-05C 210218 NO SCALE

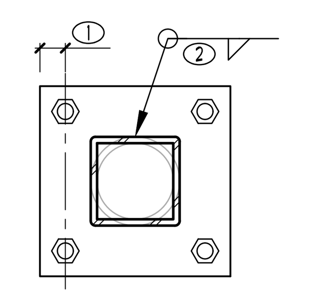

TYPE "A"

1. AISC MIN. EDGE DISTANCE OR EDGE DISTANCE TO ACCOMMODATE PLATE WASHER AND WELDS, WHICHEVER IS GREATER
2. 1/4" OR MIN. WELD SIZE PER AISC MANUAL TABLE J2.4, WHICHEVER IS GREATER, FOR BASE PLATES UP TO 3/4" THICK. 5/16" FOR BASE PLATES OVER 3/4" THICK

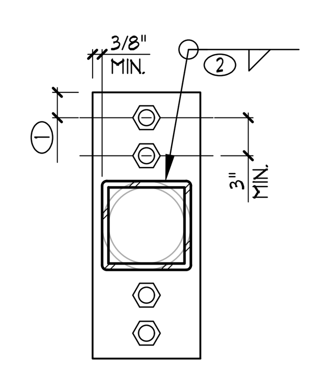

TYPE "B"

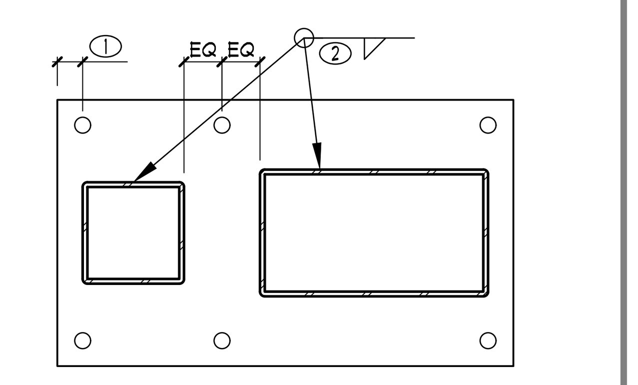

TYPE "D"

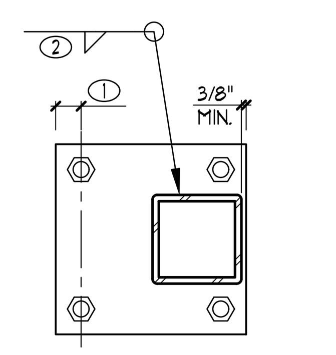

TYPE "C"

A. SEE PLAN OR SCHEDULE FOR BASE PLATE DIMENSIONS

B. BASE PLATE CONNECTIONS MAY REQUIRE MORE ANCHOR BOLTS THAN SHOWN. SEE PLAN OR SCHEDULE FOR SIZE, TYPE, AND NUMBER OF BOLTS. SEE SCHEDULE BELOW FOR MAX. ANCHOR BOLT HOLE DIA.

BOLT DIA (db)	MAX. HOLE DIA.
3/4" TO 1"	db + 5/16"
1" TO 2"	db + 1/2"
OVER 2"	db + 1"

03 TYPICAL COLUMN BASE PLATE SCHEDULE

03-220376 NO SCALE

WRIGHT STRUCTURAL ENGINEERS
ENGINEERED IN THE USA
2 Venture, Suite 200
Irvine, CA 92618
phone (949) 477-4001
CA@wrightengineers.com
wrightengineers.com
Las Vegas | Orange County | Phoenix | Salt Lake City | Dallas

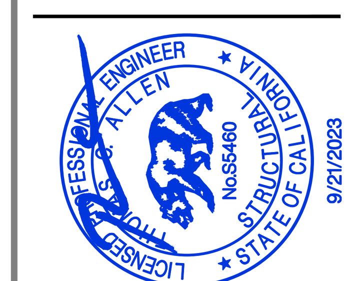

9/21/2023

HELIOTROPE DUPLEX
407 Heliotrope Ave.
Corona Del Mar, CA 92625

COPYRIGHT (C) WRIGHT ENGINEERS. USE OF THIS DRAWING AND ANY REPRODUCTIONS SHALL BE RESTRICTED TO THE ORIGINAL SITE FOR WHICH IT WAS PREPARED. REPRODUCTION OR RE-USE OF THIS DRAWING FOR ANY OTHER PURPOSE IS STRICTLY PROHIBITED.

NUMBER	DATE	DESCRIPTION
1	09-21-2023	PLAN CHECK REVISIONS

DATE: May 25, 2023
DESIGN BY: RO
PROJECT MGR: RO
PROJECT NO: 220376

TYPICAL DETAILS

S04-220376-D

S0.4

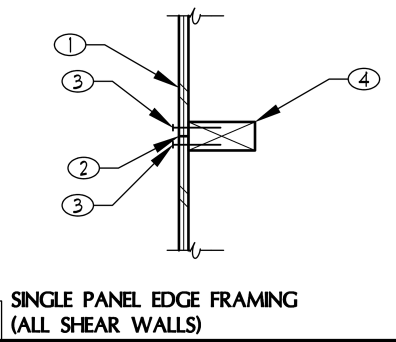

A SINGLE PANEL EDGE FRAMING (ALL SHEAR WALLS)

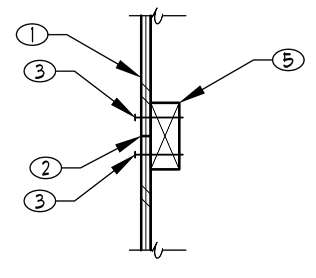

B FLAT PANEL EDGE FRAMING (ALL SHEAR WALLS)

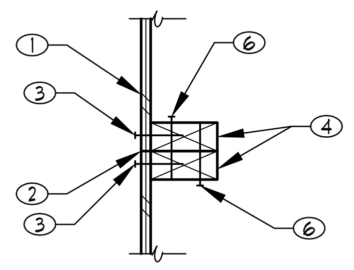

C DOUBLE PANEL EDGE FRAMING (SHEAR WALLS SW1-SW16 ONLY)

1. SHEAR WALL SHEATHING PER PLAN
2. BREAK IN SHEATHING AT ADJOINING PANEL EDGES
3. EDGE NAILING PER PLAN
4. FRAMING AT ADJOINING PANEL EDGES. MIN. SIZE PER PLAN
5. 2x4 MIN. THIS OPTION MEETS THE REQUIREMENTS FOR 3x FRAMING AT ADJOINING PANEL EDGES WHERE REQ'D IN SHEAR WALL SCHEDULE. THIS STUD IS NOT CONSIDERED TO BE ONE OF THE WALL STUDS
6. STITCH NAIL FROM BOTH SIDES PER TABLE BELOW. STAGGER AS REQUIRED TO AVOID INTERFERENCE

MARK	STITCH NAILING
SW1-SW7	16d AT 16" o.c. MAX.
SW8-SW10	16d AT 10" o.c. MAX.
SW11	16d AT 6" o.c. MAX.
SW12-SW16	16d AT 4" o.c. MAX.
SW17-SW18	16d AT 3" o.c. MAX., STAGGERED

A. OPTIONS A AND B MAY BE USED AT ALL SHEAR WALLS. OPTION C MAY BE USED AT SHEAR WALLS REFERENCED IN TABLE ABOVE

20 SHEAR WALL ADJOINING PANEL EDGE FRAMING

WA01-38 190626 NO SCALE

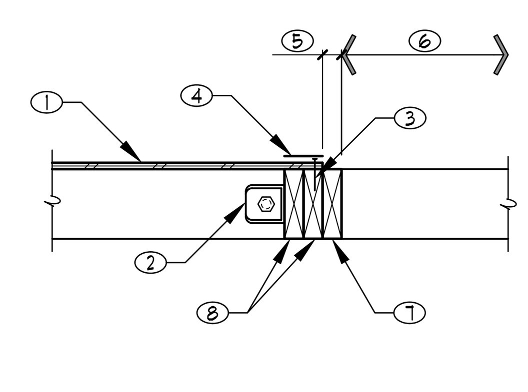

1. SHEAR WALL SHEATHING PER PLAN. SHEATHING NEED NOT EXTEND ONTO TRIMMER STUD(S)
2. BOLTED HOLDOWN AS OCCURS PER PLAN
3. SHEAR WALL EDGE NAILING INTO END STUD
4. STRAP HOLDOWN AS OCCURS PER PLAN. HOLDOWN NAILS MAY COUNT AS PLYWOOD EDGE NAILING
5. 1 1/2" MIN. FROM ROUGH OPENING TO PLYWOOD SHEAR WALL SHEATHING AT WINDOW
6. OPENING
7. TRIMMER STUD(S)
8. SHEAR WALL END STUDS/POST PER PLAN MAY COUNT AS KING STUDS AS REQUIRED PER PLAN

21 TYPICAL END OF PLYWOOD SHEAR WALL AT OPENING

WW08-10 080206 NO SCALE

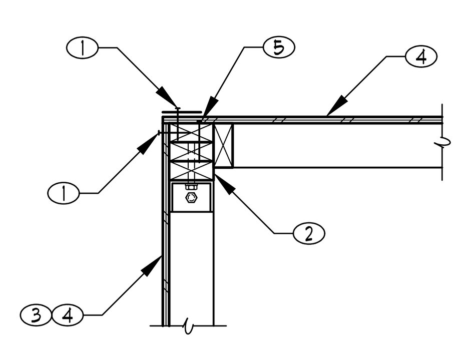

A AT 2x4 WALL

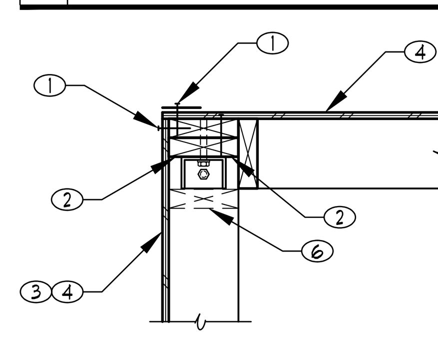

B AT 2x6 WALL

1. EDGE NAILING
2. DOUBLE END STUDS OR POST PER PLAN WITH BOLTED OR STRAP HOLDOWN PER PLAN
3. EXTEND SHEAR WALL WITH HOLDOWN TO END OF CORNER
4. SHEAR WALL SHEATHING
5. FACE NAIL STUDS TOGETHER w/ 16d AT SPACING TO MATCH SHEAR WALL EDGE NAILING OF THE SHEAR WALL REQUIRING THE CLOSEST SPACING
6. DRYWALL BACKING BLOCK AS REQ'D.

22 SHARED HOLDOWN AT CORNER - PLAN VIEW

WA01-10 BDW.060926 NO SCALE

B. AT HOLE LARGER THAN 2" DIA. AT 2x4 WALL OR AT NOTCH PLACE STUD DIRECTLY UNDER ANY TRUSS LOCATED IN THE STUD BAY CONTAINING THE HOLE/NOTCH

C. AT PENETRATIONS AND NOTCHES LARGER THAN NOTED ABOVE USE HS-24 HARDY SADDLE (PFC-5342) w/ (22) 16d COMMON. HARDY SADDLE MAY BE INSTALLED UPSIDE-DOWN.

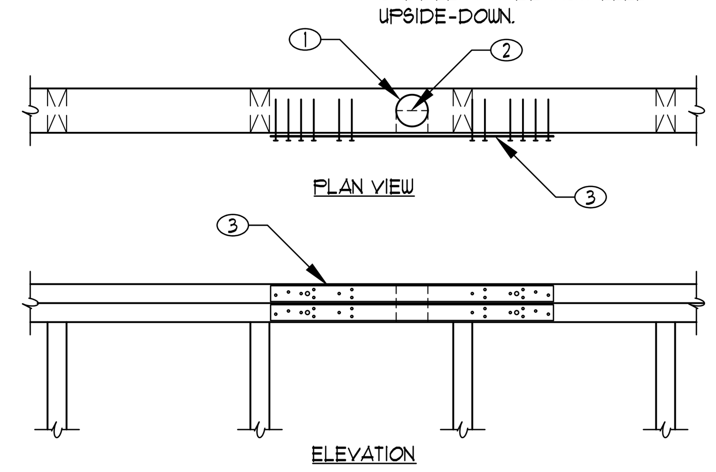

1. 2 9/16" MAX. DIAMETER HOLE AT 2x4 WALL. 4" MAX. DIAMETER HOLE AT 2x6 WALL. CENTER HOLE IN TOP PLATES
2. 1 3/4" DEEP x 2 1/2" LONG NOTCH IN TOP PLATES ALLOWED
3. RPS22 (OR RPS28) w/ (16) 16d, OR CS16 x 32" w/ (26) 8d, EACH PLATE, EXCEPT PER NOTE A

A. NO STRAP REQ'D. WHERE PLATES ARE STITCH NAILED ON BOTH SIDES OF HOLE w/ NAILS INSTALLED BETWEEN HOLE AND BREAK IN EITHER TOP PLATE PER TABLE BELOW. NAILS PER TYPICAL TOP PLATE SPLICE DETAIL MAY COUNT IN TOTAL NUMBER OF NAILS

PLATE	HOLD DIA.	NAILS
2x4	3/4" OR LESS	4
	1 3/4" OR LESS	10
2x6	2 1/2" OR LESS	4
	3 3/4" OR LESS	10

17 TYPICAL HOLE IN DOUBLE TOP PLATE

WA01-23 110331 NO SCALE

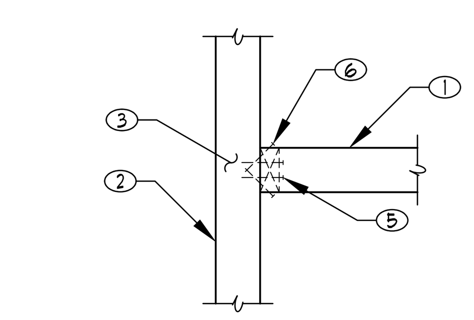

A OPTION A

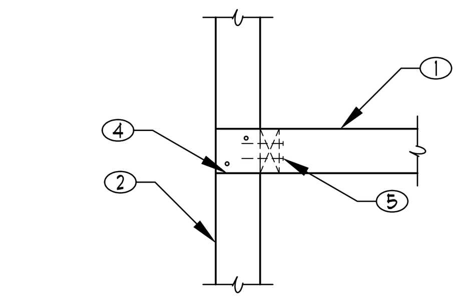

B OPTION B

1. INTERIOR WALL
2. EXTERIOR WALL
3. DO NOT NOTCH TOP PLATE
4. BREAK IN TOP PLATE FOR INTERIOR WALL LAP SHALL BE TREATED AS TYPICAL TOP PLATE BREAK PER FRAMING PLAN NOTE. ATTACH LAP TO TOP PLATE w/ (2) 16d
5. (2) 16d AT 24" o.c. TO FULL HEIGHT STUD(S) OR LADDER BLOCKING BETWEEN STUDS. FASTEN BLOCKING TO ADJACENT STUDS w/ (2) 16d EACH END
6. (2) 16d TOENAILS EACH PLATE, (4) TOTAL. AT NON-LOAD BEARING INTERIOR WALLS, TOENAIL 1x TOPMOST PLATE FROM TOP TO AVOID SPLITTING

A. APPLICABLE AT ALL INTERIOR/EXTERIOR INTERSECTIONS U.N.O. ON PLANS

B. ADDITIONAL STUD(S) AS REQUIRED AT THE ENDS OF SHEARWALLS NOT SHOWN FOR SIMPLICITY

18 INTERIOR/EXTERIOR WALL INTERSECTION

WA01-22 080627 NO SCALE

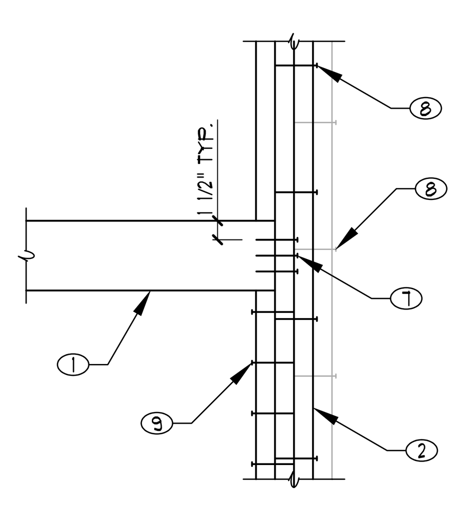

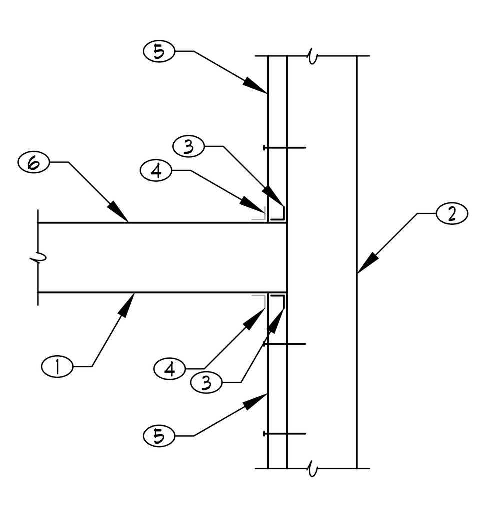

1. HEADER PER PLAN
2. KING POST / STUD(S) PER PLAN
3. A34 CLIP PER TABLE A. MAY BE INSTALLED TOP OR BOTTOM FOR SINGLE CLIP
4. ALTERNATE CLIP LOCATION
5. WITH ALTERNATE LOCATION, FASTEN TRIMMER / CRIPPLE PER TABLE A
6. CLIP NOT REQUIRED ON TOP OF HEADER IF HEADER IS FASTENED TO TOP PLATE (BUILT UP TOP PLATE). IF SINGLE CLIP IS REQUIRED, IT MAY BE IGNORED FOR THIS SITUATION
7. (2) 16d AT 3" o.c.
8. 16d AT 16" o.c. U.N.O. ON PLAN, EA. MEMBER AT MULTIPLE KING STUDS
9. FASTEN TRIMMER TO KING STUD(S) w/ 16d AT 8" o.c. AT MULTIPLE TRIMMERS, FASTEN TRIMMER TO TRIMMER w/ 16d AT 8" o.c.

HEADER LENGTH	TOTAL No. A34	CRIPPLE TO KING POST
6'-0" OR LESS	1	(4) 16d TOTAL
6'-1" TO 11'-0"	2	(7) 16d TOTAL
16' AND LONGER GARAGE DOOR HEADER	2	(7) 16d TOTAL

19 TYPICAL HEADER TO POST CONNECTION

WA01-34 110513 NO SCALE

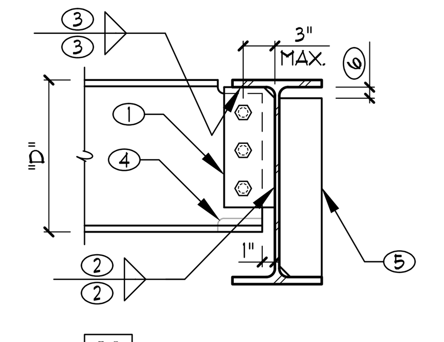

X BEAM (1) SIDE

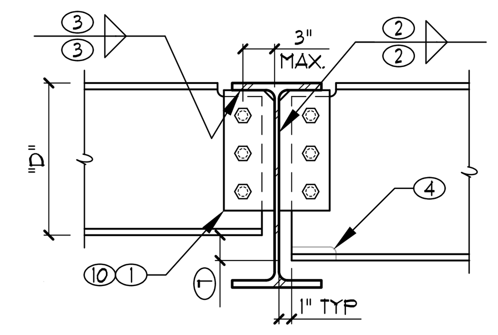

Y BEAM (2) SIDES

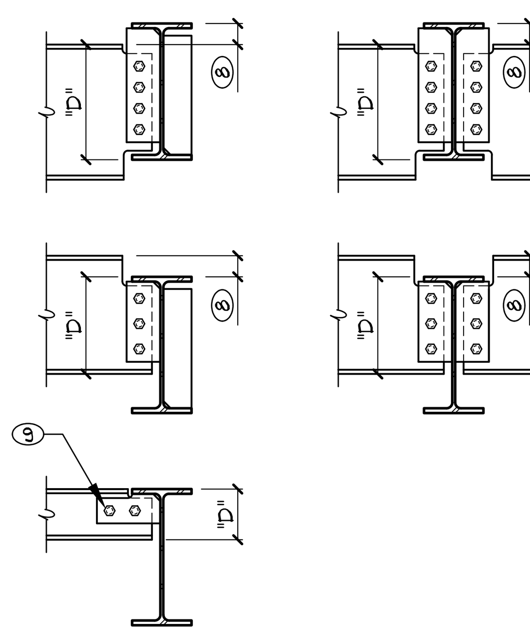

1. SHEAR PLATE, BOLTS, ETC., PER TYPICAL SHEAR PLATE CONNECTION SCHEDULE
2. WELD SIZE PER TYPICAL SHEAR PLATE CONNECTION SCHEDULE, TYP. AT SHEAR PLATE TO BEAM WEB WELDS
3. MIN. WELD SIZE PER AISC 360, TABLE J2.4, TYP. AT SHEAR PLATE TO BEAM FLANGE WELDS
4. COPE BOTTOM OF BEAM AS NECESSARY TO AVOID INTERFERENCE w/ SHEAR PLATE OR BOTTOM FLANGE OF SUPPORTING BEAM
5. STIFFENER PLATE OPPOSITE SHEAR PLATE. STIFFENER THICKNESS SHALL EQUAL SHEAR PLATE THICKNESS. STIFFENER NOT REQ'D. WHERE DEPTH OF SUPPORTED BEAM IS LESS THAN 1/2 THE DEPTH OF THE SUPPORTING BEAM
6. STIFFENER SHALL EXTEND TO WITHIN 1/2" OF BEAM FILLET
7. WHERE SUPPORTED BEAMS DIFFER IN DEPTH BY 3" OR GREATER, EXTEND SHEAR PLATE FOR DEEPER BEAM TO BOTTOM FLANGE OF SUPPORTING BEAM AND WELD PER NOTE (1)
8. OFFSET TOP OF BEAM TO MATCH ADJACENT STEEL JOIST BEARING DEPTH AS OCCURS
9. HORIZ. BOLT ROW AT "D" = 7" OR LESS
10. AT DETAIL 15A, USE STD. HOLES IN BOTH BEAM WEB AND SHEAR PLATE. BOLTS SHALL BE FULLY PRETENSIONED. FAYING SURFACES SHALL BE PREPARED AS REQ'D. FOR CLASS "A" SLIP-CRITICAL JOINTS (SEE G.S.N. FOR ADDITIONAL INFO.)

15 STEEL BEAM TO BEAM SHEAR PLATE CONNECTION

15-220376 NO SCALE

15A AS NOTED SLRS

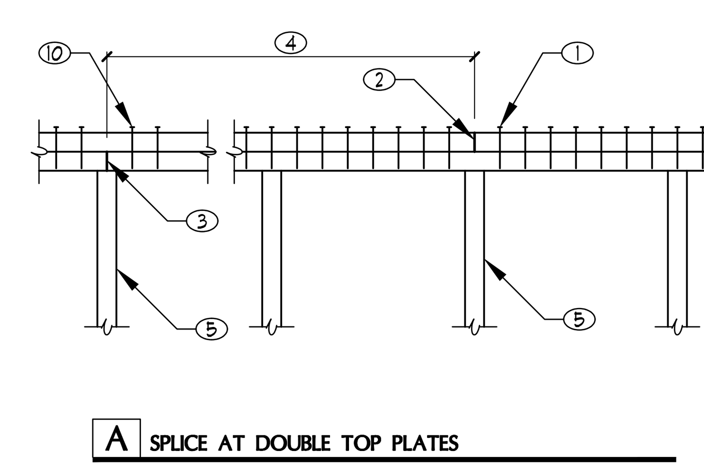

A SPLICE AT DOUBLE TOP PLATES

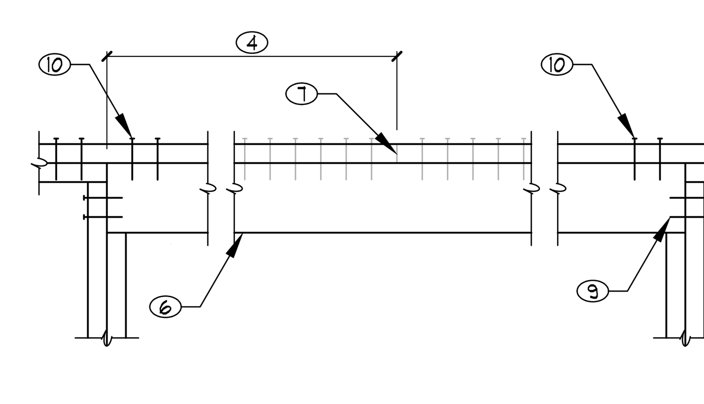

B SPLICE AT BEAM

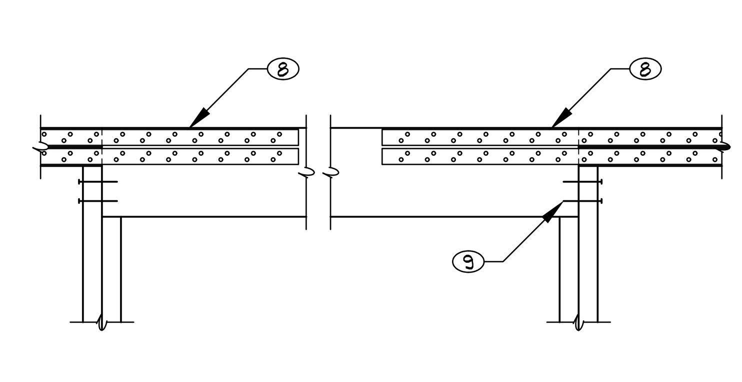

C SPLICE AT BEAM

1. PROVIDE NAILING PER TABLE BELOW EACH SIDE OF JOIN IN TOPMOST MEMBER OF DOUBLE TOP PLATE U.N.O. ON PLAN. NAILS IN SAME LINE 2" o.c. MIN. INCREASE NAIL SPACING UP TO 8" o.c. MAX., STAGGER NAILS AND SPACE EVENLY TO AVOID SPLITTING

PLATE SIZE	NAILS
2x4	(21) 16d
2x6	(44) 16d

2. JOINT IN TOPMOST MEMBER
3. JOINT IN BOTTOMMOST MEMBER
4. JOINTS IN DOUBLE TOP PLATES SHALL BE OFFSET 48" MIN.
5. ALIGN STUD BENEATH CENTER OF SPLICE AT BREAK IN EITHER MEMBER OF DOUBLE TOP PLATE
6. BEAM MAY ACT AS BOTTOMMOST MEMBER AS OCCURS
7. GHOSTED ITEMS INDICATE OPTIONAL SPLICE w/ NAILING PER (1) AT BEAMS EXCEEDING 8'-0" IN LENGTH. AT BEAMS LESS THAN 8'-0" IN LENGTH TOP PLATE SHALL RUN CONTINUOUS OVER BEAM. NO STRAPS REQUIRED FROM BEAM TO BOTTOMMOST PLATE
8. STRAPS PER NOTE A AT EACH END OF BEAM. CS14 STRAPS MAY BE CONT. w/ (2) 8d AT 4 1/8" o.c. TO BEAM AND (16) 8d TO PLATE
9. BEAM TO KING STUD CONNECTION PER TYPICAL NAILING SCHEDULE
10. (4) 16d EACH SIDE OF JOINT IN BOTTOMMOST MEMBER

A. AT LOCATIONS WHERE TOP PLATE CANNOT BE LAP SPLICED, STRAP EACH PLATE w/ CS14 x 30" w/ (2) 8d AT 2 1/16" o.c. AND PROVIDE HALF OF NAILING PER (1) PRIOR TO JOINT IN EITHER TOPMOST OR BOTTOMMOST MEMBER.

B. AT CHANGE IN WALL THICKNESS TRANSITION, STRAP TOP PLATE PER NOTE A ABOVE OR RIP 2x6 CONTINUOUS TOPMOST PLATE DOWN TO 2x4 AND LAP SPLICE PER OPTION A

16 TYPICAL TOP PLATE SPLICE

WA01-21 200514 NO SCALE

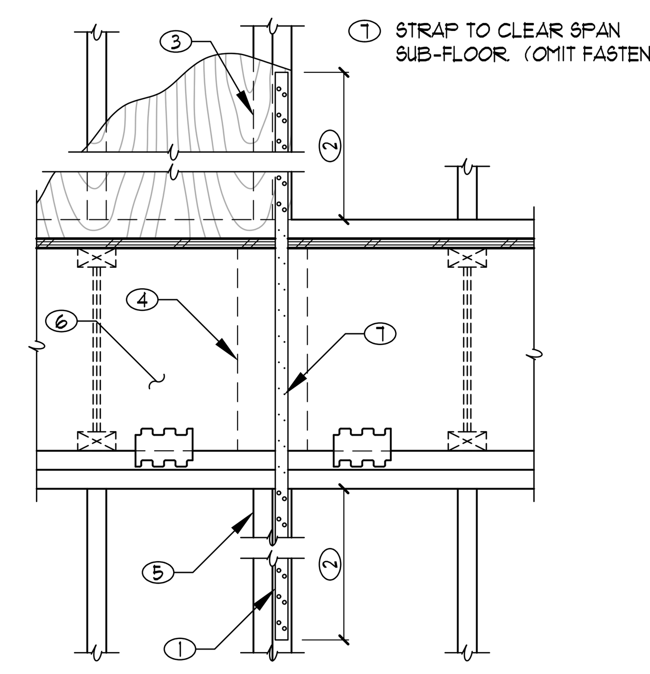

6. RIM BOARD AND CLIP SPACING PER DETAIL
7. STRAP TO CLEAR SPAN SUB-FLOOR. (OMIT FASTENERS)

1. HOLDOWN STRAP(S) PER PLAN
2. END LENGTH AND FASTENERS TO FRAMING MEMBER (HEADER, BEAM, JOIST, OR STUD(S)) BELOW. EXTEND LENGTH OF STRAP AND FASTEN TO FRAMING MEMBER w/ REQUIRED NUMBER OF END LENGTH NAILS PER MFR. ALL END LENGTH NAILS TO BE FASTENED TO FRAMING MEMBER. WRAP STRAP AROUND BOTTOM OF FRAMING MEMBER AS REQ'D.
3. SHEAR WALL DOUBLE END STUD (OR POST PER PLAN). INSTALL STRAP ON TOP OF PLYWOOD SHEATHING. STRAP NAILING MAY COUNT AS SHEAR WALL EDGE NAILING
4. SOLID 2x6 BLOCKING ALIGNED UNDER SHEAR WALL END STUDS OR POST. BLOCKING NOT REQUIRED AT 3 1/2" RIM BOARD. WHERE JOISTS ARE PARALLEL TO RIM, PROVIDE I-JOIST BLOCKING ADJACENT TO 2x6 BLOCKING
5. ALIGN MIN. (2) STUDS (U.N.O. ON PLAN) OR MATCH POST ABOVE FOR STRAP ATTACHMENT

11 HOLDOWN STRAP AT UPPER STORY SHEAR WALL

WW05-17CA 070911 NO SCALE

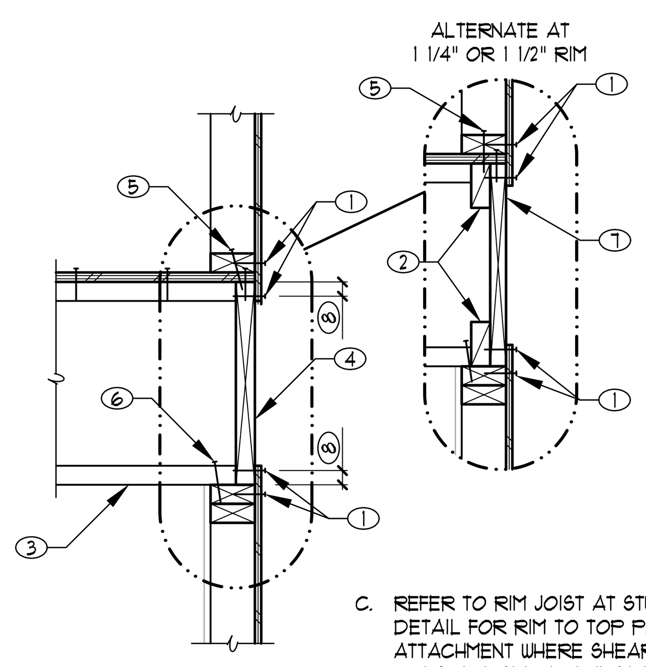

C. REFER TO RIM JOIST AT STUD WALL DETAIL FOR RIM TO TOP PLATE ATTACHMENT WHERE SHEAR WALL DOES NOT ALIGN BENEATH UPPER STORY SHEAR WALL.

1. EDGE NAILING
2. SOLID 2x BLOCK. NO BLOCK REQUIRED AT 1 1/2" LSL RIM RECEIVING FASTENERS FROM SHEARWALLS SW9, SW11, SW13, AND SW16
3. I-JOIST OR I-JOIST BLOCKING PER PLAN OR DETAIL
4. 1 3/4" LSL RIM BOARD, EXCEPT AT ALTERNATE
5. SILL PLATE NAILING PER TYPICAL NAILING SCHEDULE, DETAIL 301
6. (2) 16d INTO TOP PLATE
7. 1 1/4" OR 1 1/2" LVL RIM
8. 3" MAX.

A. CROSS LAMINATED LVL RIM BOARD MAY BE USED AS AN ALTERNATE TO LSL.

B. THIS DETAIL MAY NOT BE USED FOR SHEAR WALLS SW18 AND SW20.

12 ALTERNATE UPPER STORY RIM AND SHEAR WALL ATTACHMENT

WW05-19CA 171103 NO SCALE

NOMINAL BEAM DEPTH "D"	NUMBER OF BOLTS	BOLT DIA.	SHEAR PLATE THICKNESS	WELD SIZE
UP TO 7"	2	3/4"	1/4"	3/16"
8" TO 10"	2	3/4"	1/4"	3/16"
12" TO 14"	3	3/4"	3/8"	1/4"
16"	4	3/4"	3/8"	1/4"
18"	5	3/4"	3/8"	1/4"
21"	5	1"	1/2"	5/16"
24"	6	1"	1/2"	5/16"
27"	7	1"	1/2"	5/16"
30"	8	1"	9/16"	3/8"
33"	9	1"	9/16"	3/8"
36"	10	1"	9/16"	3/8"
40" TO 44"	11	1"	9/16"	3/8"

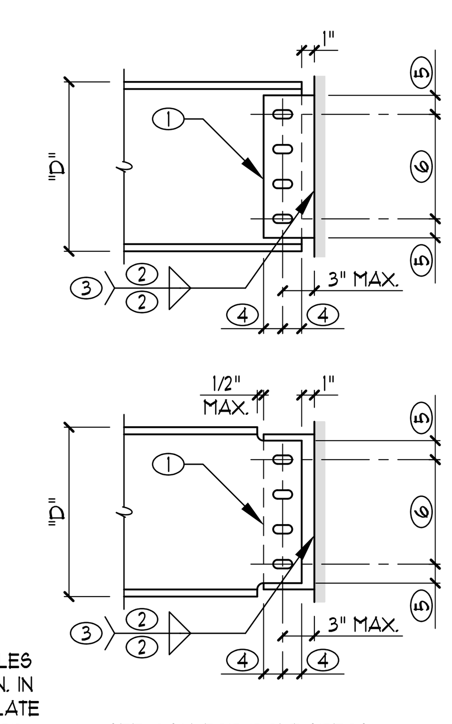

1. SHEAR PLATE THICKNESS AND BOLTS PER SCHEDULE
2. WELD SIZE PER SCHEDULE
3. DO NOT RETURN FILLET WELDS ACROSS TOP AND BOTTOM EDGES OF SHEAR PLATE
4. 2 x BOLT DIA.
5. 3/4" DIA. BOLTS: 1 1/2"
   1" DIA. BOLTS: 1 3/4"
6. HORIZ. SHORT-SLOTTED HOLES PER AISC 360 AT 3" o.c. MIN. IN EITHER BEAM OR SHEAR PLATE U.N.O. ON DETAILS. STANDARD ROUND HOLES IN MATING PIECE

A. SEE G.S.N. FOR BOLT SPECS.

13 TYPICAL SHEAR PLATE CONNECTION SCHEDULE

SCH02-01 211026 NO SCALE

CONNECTION	MINIMUM NAILING, U.N.O. ON PLANS OR DETAILS
JOIST OR TRUSS TO TOP PLATE, SILL, ETC.	(3) 16d OR (3) 3" x 0.131", TOENAIL
BRIDGING TO JOIST	(2) 8d COMMON OR (2) 3" x 0.131", TOENAIL EACH END
BOTTOM PLATE TO JOIST OR BLOCKING (AT SHEAR WALLS, SEE SHEAR WALL SCHEDULE)	16d AT 16" o.c. OR 3" x 0.131" AT 8" o.c., FACE NAIL
TOP PLATE TO STUD	(2) 16d COMMON OR (3) 3" x 0.131", END NAIL
TOP AND BOTTOM PLATE TO POST	(2) 16d COMMON OR (3) 3" x 0.131", END NAIL
STUD TO BOTTOM PLATE	TOENAILS: (4) 8d COMMON OR (4) 3" x 0.131" OR (4) 16d AT 3x AND LARGER END NAILS: (2) 16d COMMON OR (3) 3" x 0.131" OR (2) 20d AT 3x
DOUBLE OR MULTIPLE BUILT-UP STUDS (POST)	16d AT 16" o.c. OR 3" x 0.131" AT 8" o.c., FACE NAIL
DOUBLE OR MULTIPLE TOP PLATES	16d AT 16" o.c. OR 3" x 0.131" AT 12" o.c., FACE NAIL
BLOCKING BETWEEN JOIST OR RAFTERS TO TOP PLATE	(3) 16d OR (3) 3" x 0.131", TOENAIL
RIM JOIST TO TOP PLATE	16d AT 6" o.c. OR 3" x 0.131" AT 6" o.c., TOENAIL
TOP PLATES, LAPS AND INTERSECTIONS	(2) 16d COMMON OR (3) 3" x 0.131", FACE NAIL
CONTINUOUS HEADER, TWO OR MORE LAMINATIONS	16d COMMON AT 16" o.c. ALONG EACH EDGE
CEILING JOISTS TO PLATE	(3) 16d OR (5) 3" x 0.131", TOENAIL
CONTINUOUS HEADER TO INTERMEDIATE SUPPORT(S)	(4) 8d COMMON TOENAIL
CEILING JOISTS, LAPS OVER PARTITIONS	(3) 16d COMMON OR (4) 3" x 0.131", FACE NAIL
CEILING JOISTS TO PARALLEL RAFTERS	(3) 16d COMMON OR (4) 3" x 0.131" FACE NAIL
RAFTER OR TRUSS TO PLATE	(3) 16d OR (3) 3" x 0.131", TOENAIL
CORNER G.T./RAFTER TO PLATE	(4) 16d, TOENAIL
BUILT-UP CORNER STUDS	16d AT 16" o.c. OR 3" x 0.131" AT 16" o.c.
KING STUD TO HEADER	SEE DETAIL 19/S0.6

B. MISC. NAILING SHALL BE PER CBC TABLE 2304.10.1

A. SEE PLAN OR G.S.N. FOR TOP PLATE SPLICE CONNECTION

14 TYPICAL NAILING SCHEDULE

14-220376 NO SCALE

WRIGHT
STRUCTURAL ENGINEERS
ENGINEERED IN THE USA
2 Venture, Suite 200
Irvine, CA 92618
phone (949) 477-4001
CA@wrightengineers.com
wrightengineers.com
Las Vegas | Orange County | Phoenix | Salt Lake City | Dallas

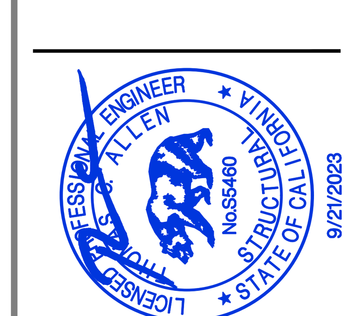

HELIOTROPE DUPLEX
407 Heliotrope Ave.
Corona Del Mar, CA 92625

COPYRIGHT (C) WRIGHT ENGINEERS. USE OF THIS DRAWING AND ANY REPRODUCTIONS SHALL BE RESTRICTED TO THE ORIGINAL SITE FOR WHICH IT WAS PREPARED. REPRODUCTION OR RE-USE OF THIS DRAWING FOR ANY OTHER PURPOSE IS STRICTLY PROHIBITED.

NUMBER	DATE	DESCRIPTION
1	09-21-2023	PLAN CHECK REVISIONS

DATE: May 25, 2023
DESIGN BY: RO
PROJECT MGR: RO
PROJECT NO: 220376

TYPICAL DETAILS

S05-220376-D

S0.5

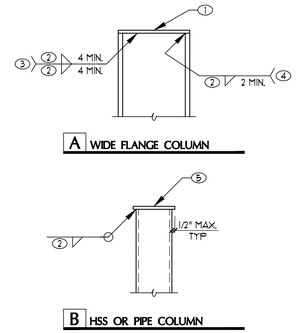

A WIDE FLANGE COLUMN

B HSS OR PIPE COLUMN

1. 1/2" MIN. CAP PLATE U.N.O.
2. MIN. WELD SIZE PER AISC 360, TABLE J2.4
3. CAP PLATE TO COLUMN WEB
4. CAP PLATE TO COLUMN FLANGE, TYP. BOTH FLANGES AT BOTH SIDES OF COLUMN WEB
5. CAP PLATE THICKNESS SHALL BE EQUAL TO COLUMN WALL THICKNESS OR 1/4", WHICHEVER IS GREATER, U.N.O.

A. ADJOINING FRAMING AS OCCURS NOT SHOWN FOR CLARITY

23 TYPICAL COLUMN CAP PLATE

501-16 070914 NO SCALE

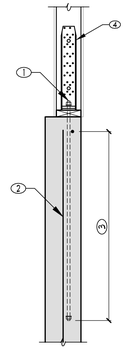

1. ALL-THREAD HOLDOWN BOLT w/ DOUBLE NUT AND WASHER PER G.S.N. EMBEDMENT MEASURED FROM TOP OF POUR JOINT
2. ADDITIONAL (2) #5 VERT. EACH SIDE OF HOLDOWN BOLT. EXTEND TO BOTTOM OF WALL AND LAP w/ FOOTING DOWELS

HOLDOWN PER PLAN 4	LAP LENGTH (MIN.) 3
HDU2, HDU4, HDU5	2'-0"
HDU8	3'-6"
HDU11, HDU14, HD12, HD19	HOLDOWN TO EXTEND INTO FOOTING, PER G.S.N.

24 TYPICAL HOLDOWN BOLT AT CONCRETE WALL

125-202277 NO SCALE

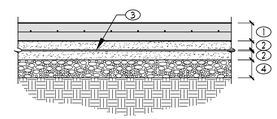

1. SLAB-ON-GRADE PER PLAN NOTES
2. 2" SAND LAYER
3. (1) OR (2) LAYERS OF 15 MIL MOISTURE BARRIER, PER GEOTECHNICAL ENGINEER
4. 4" GRAVEL SUB-BASE PER GEOTECHNICAL ENGINEER

A. SUB-GRADE IS PER CITY OF NEWPORT BEACH REQUIREMENTS.

B. CONTRACTOR TO VERIFY SUB-GRADE REQUIREMENTS OF CITY OF NEWPORT BEACH ARE IN CONFORMANCE w/ GEOTECHNICAL REPORT.

C. VAPOR BARRIER TO COMPLY WITH ASTM 1745 CLASS "A"

25 TYPICAL SUB-GRADE

05-211313 NO SCALE

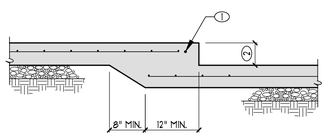

1. #4 NOSING BAR
2. SLAB STEP PER ARCH'L. 2" MAX.

26 STEP IN SLAB AT RECESSED SHOWER

26-220376 NO SCALE

REGISTERED PROFESSIONAL ENGINEER ROBERT J. MCCARTHY No. 2490 Exp. 3/31/24 GEOTECHNICAL STATE OF CALIFORNIA

Signed 10/25/2023

REVIEW IS SUBJECT TO THE LIMITATIONS STATED IN THE REPORT DATED 5-5-2022, FILE NO: 8677-10 REPORT NO: R1-8677 R MCCARTHY CONSULTING, INC.

WRIGHT STRUCTURAL ENGINEERS
ENGINEERED IN THE USA
2 Venture, Suite 200
Irvine, CA 92618
phone (949) 477-4001
CA@wrightengineers.com
wrightengineers.com
Las Vegas | Orange County | Phoenix | Salt Lake City | Dallas

LICENSED PROFESSIONAL ENGINEER ALLEN No.85460 STRUCTURAL STATE OF CALIFORNIA 9/21/2023

HELIOTROPE DUPLEX
407 Heliotrope Ave.
Corona Del Mar, CA 92625

COPYRIGHT (C) WRIGHT ENGINEERS. USE OF THIS DRAWING AND ANY REPRODUCTIONS SHALL BE RESTRICTED TO THE ORIGINAL SITE FOR WHICH IT WAS PREPARED. REPRODUCTION OR RE-USE OF THIS DRAWING FOR ANY OTHER PURPOSE IS STRICTLY PROHIBITED.

NUMBER	DATE	DESCRIPTION
1	09-21-2023	PLAN CHECK REVISIONS

DATE: May 25, 2023
DESIGN BY: RO
PROJECT MGR: RO
PROJECT NO: 220376

TYPICAL DETAILS

S06-220376-D

S0.6

REFER TO SHEET S0.3 FOR SITE PLAN NOTES AND SCHEDULES

REGISTERED PROFESSIONAL ENGINEER
ROBERT J. MCCARTHY
No. 2490
Exp. 3/31/24
GEOTECHNICAL
STATE OF CALIFORNIA
Signed 10/25/2023

REVIEW IS SUBJECT
TO THE LIMITATIONS
STATED IN THE REPORT DATED
5-5-2022, FILE NO: 8677-10
REPORT NO: R1-8677
R MCCARTHY CONSULTING, INC.

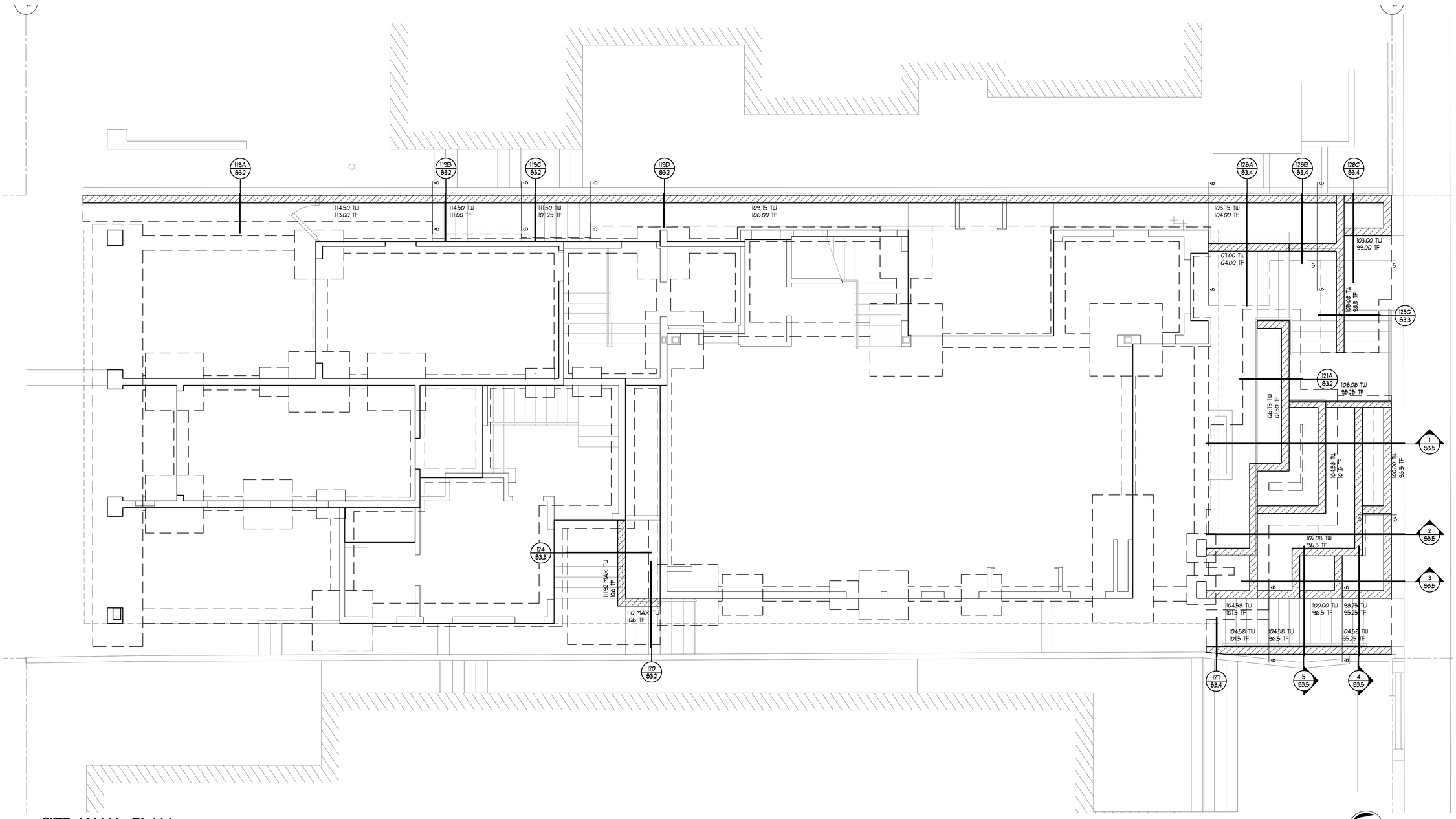

SITE WALL PLAN

SCALE: 1/4"=1'-0"

WRIGHT STRUCTURAL ENGINEERS
ENGINEERED IN THE USA
2 Venture, Suite 200
Irvine, CA 92618
phone (949) 477-4001
CA@wrightengineers.com
wrightengineers.com
Las Vegas | Orange County | Phoenix | Salt Lake City | Dallas

LICENSED PROFESSIONAL ENGINEER
THOMAS A. ALLEN
No.85460
STRUCTURAL
STATE OF CALIFORNIA
9/21/2023

HELIOTROPE DUPLEX
407 Heliotrope Ave.
Corona Del Mar, CA 92625

COPYRIGHT (C) WRIGHT ENGINEERS. USE OF THIS DRAWING AND ANY REPRODUCTIONS SHALL BE RESTRICTED TO THE ORIGINAL SITE FOR WHICH IT WAS PREPARED. REPRODUCTION OR REUSE OF THIS DRAWING FOR ANY OTHER PURPOSE IS STRICTLY PROHIBITED.

NUMBER	DATE	DESCRIPTION
1	09-21-2023	PLAN CHECK REVISIONS

DATE: May 25, 2023
DESIGN BY: RO
PROJECT MGR: RO
PROJECT NO: 220376

SITE WALL PLAN

S11-220376-PS_SITE

S1.1

REFER TO SHEET S0.3 FOR FOUNDATION PLAN NOTES AND SCHEDULES

FOUNDATION PLAN KEYNOTES

1. SIMPSON WSWH12x8 HIGH-STRENGTH WOOD STRONG WALL TEMPLATE. SEE DETAIL 115/S3.2 FOR STRONG WALL AT FOUNDATION
2. SIMPSON WSWH18x8 HIGH-STRENGTH WOOD STRONG WALL TEMPLATE w/ HIGH-STRENGTH BOLTS. SEE DETAIL 115/S3.2 FOR STRONG WALL AT FOUNDATION
3. ALIGN HOLDOWN UNDERNEATH STRAP FROM ABOVE
4. 1'-3" WIDE x 24" DEEP GRADE BEAM w/ (2) #5 TOP AND BOTTOM. EXTEND REINFORCING PER DETAIL 106/S3.1 INTO INTERSECTING FOOTING. FOOTING EMBEDMENT PER PLAN NOTE, TYP. WHERE SHOWN
5. STAIR ABOVE CRIPPLE WALL BY OTHERS

REGISTERED PROFESSIONAL ENGINEER ROBERT J. MCCARTHY No. 2490 Exp. 3/31/26 GEOTECHNICAL STATE OF CALIFORNIA
Signed 10/25/2023

REVIEW IS SUBJECT TO THE LIMITATIONS STATED IN THE REPORT DATED 5-5-2022, FILE NO: 8677-10 REPORT NO: R1-8677 R MCCARTHY CONSULTING, INC.

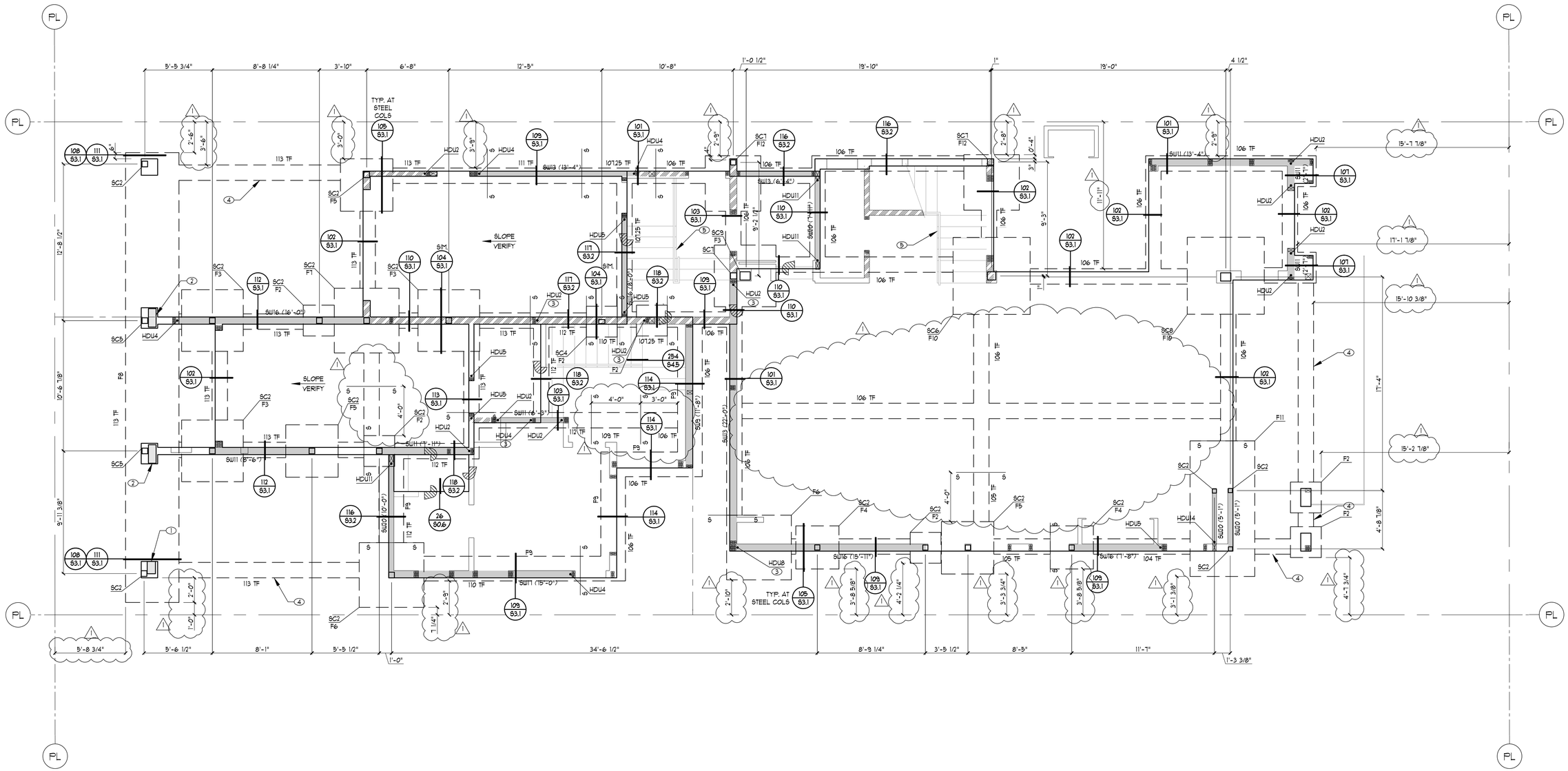

FOUNDATION PLAN

SCALE: 1/4"=1'-0"

WRIGHT STRUCTURAL ENGINEERS
ENGINEERED IN THE USA
2 Venture, Suite 200
Irvine, CA 92618
(949) 474-4001
CA@wrightengineers.com
wrightengineers.com
Las Vegas | Orange County | Phoenix | Salt Lake City | Dallas

LICENSED PROFESSIONAL ENGINEER ALLEN STRUCTURAL ENGINEER No.S35460 REGISTERED PROFESSIONAL ENGINEER STATE OF CALIFORNIA 10/24/2023

HELIOTROPE DUPLEX
407 Heliotrope Ave.
Corona Del Mar, CA 92625

COPYRIGHT (C) WRIGHT ENGINEERS, USE OF THIS DRAWING AND ANY TECHNOLOGY CONTAINED HEREIN, IS RESTRICTED TO THE ORIGINAL SITE FOR WHICH IT WAS PREPARED. REPRODUCTION OR RE-USE OF THIS DRAWING FOR ANY OTHER PURPOSE IS STRICTLY PROHIBITED.

NUMBER	DATE	DESCRIPTION
1	10-23-2023	PLAN CHECK REVISIONS

DATE: May 25, 2023
DESIGN BY: RO
PROJECT MGR: RO
PROJECT NO: 220376

FOUNDATION PLAN

S12-220376-PS

S1.2

REFER TO SHEET S0.3 FOR FRAMING PLAN NOTES AND SCHEDULES

2nd FLOOR FRAMING PLAN KEYNOTES

(21) STRAP BEAM TO TOP PLATE w/ CMST12 x 66" w/ (148) 16d

(22) STRAP TOP PLATE TO TOP PLATE ON EA. SIDE OF COLUMN w/ CS14x36" w/ (52) 10d

(23) BUILT-UP STAIR SUPPORTED ON CRIPPLE WALLS AND FLOOR BELOW, BY OTHERS

(24) ATTACH HEADER TO TS/TP w/ (2) CS16x22" w/ (40) 10d. ATTACH TS/TP TO KS w/ (4) LTP4 CLIPS, EVENLY SPACED

(25) HOLE MAY BE PLACED IN STEEL BEAM PER DETAIL 280/S4.6. HOLE LOCATED AT 9'-9" AWAY FROM CANTILEVERED END OF STEEL BEAM

(26) HOLE MAY BE PLACED IN STEEL BEAM PER DETAIL 280/S4.6. HOLE LOCATED AT 14'-6" AWAY FROM CANTILEVERED END OF STEEL BEAM

(1) SIMPSON WSWH12x8 HIGH-STRENGTH WOOD STRONG WALL

(2) SIMPSON WSWH18x8 HIGH-STRENGTH WOOD STRONG WALL

(3) BOUNDARY FASTEN ALONG BEAM/JOIST

(4) STRAP BEAM TO BEAM w/ (2) CS16x22" w/ (40) 10d

(5) STRAP BEAM/RIM TO TOP PLATE/BEAM/FILLER BLOCK w/ CS16x22" w/ (40) 10d

(6) STRAP BEAM/FILLER BLOCK TO TOP PLATE w/ CMST14x60" w/ (132) 10d

(7) 2x6 RAFTERS AT 8" o.c.

(8) WRAP STRAP FROM ABOVE 6" AROUND BACK OF BEAM

(9) ALIGN BEAM UNDER POST ABOVE

(10) ATTACH BEAM TO POST w/ CS16x22" w/ (40) 10d

(11) 2x4 STUDS AT 16" o.c.

(12) 1 3/4 LVL DRAG MEMBER w/ SIMPSON ITS-TYPE HANGERS, U.N.O. BOUNDARY FASTEN ALONG BEAM

(13) STRAP TOP PLATE/BEAM TO TOP PLATE/JOIST w/ CS16x28" w/ (40) 10d

(14) STRAP TOP PLATE TO TOP PLATE w/ (2) CS14x36" w/ (52) 10d

(15) STRAP RAFTER TO RAFTER w/ LSTA12

(16) ATTACH FLUSH BEAM TO HEADER w/ (4) LTS12 TWIST STRAPS

(17) STRAP BEAM TO TOP PLATE w/ CS14x30" w/ (52) 10d

(18) STRAP TOP PLATE TO TOP PLATE ON EA. SIDE OF COLUMN w/ CS16x28" w/ (40) 10d

(19) 2x12 EYEBROW RAFTERS AT 24" o.c. w/ SIMPSON LUS-TYPE HANGERS

(20) ATTACH HOLDOWN FROM ABOVE TO STEEL BEAM PER DETAIL 209/S4.1

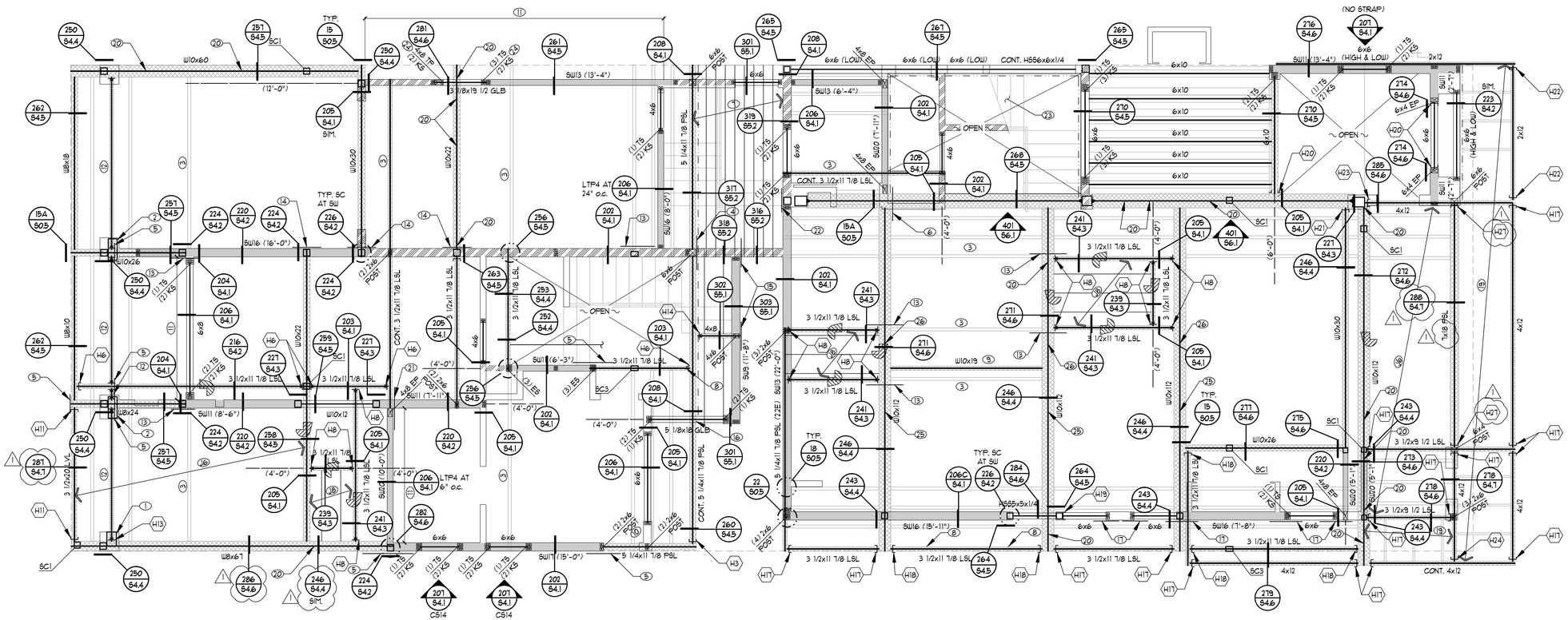

2nd FLOOR FRAMING PLAN

SCALE: 1/4"=1'-0"

NORTH

WRIGHT STRUCTURAL ENGINEERS
ENGINEERED IN THE USA
2 Venture, Suite 200
Irvine, CA 92618
(949) 474-1001
CA@wrightengineers.com
wrightengineers.com
Las Vegas | Orange County | Phoenix | Salt Lake City | Dallas

LICENSED STRUCTURAL ENGINEER ALLEN No.S54460 STATE OF CALIFORNIA 9/21/2023

HELIOTROPE DUPLEX
407 Heliotrope Ave.
Corona Del Mar, CA 92625

COPYRIGHT (C) WRIGHT ENGINEERS, USE OF THIS DRAWING AND ANY REPRODUCTIONS SHALL BE RESTRICTED TO THE ORIGINAL SITE FOR WHICH IT WAS PREPARED. REPRODUCTION OR RE-USE OF THIS DRAWING FOR ANY OTHER PURPOSE IS STRICTLY PROHIBITED.

NUMBER	DATE	DESCRIPTION
1	09-21-2023	PLAN CHECK REVISIONS

DATE: May 25, 2023
DESIGN BY: RO
PROJECT MGR: RO
PROJECT NO: 220376

2ND FLOOR FRAMING PLAN

S21-220376-PF2

S2.1

REFER TO SHEET S0.3 FOR FRAMING PLAN NOTES AND SCHEDULES

3rd FLOOR FRAMING PLAN KEYNOTES

16. EXTEND STRAPS FROM ABOVE TO BOTTOM OF BEAM. USE (20) 16d END NAILS AT EA. CMST14 STRAP
17. HSS6x6x1/4 STRINGER
18. BUILT-UP STAIR SUPPORTED ON CRIPPLE WALLS AND FLOOR BELOW, BY OTHERS
19. STRAP TOP PLATE TO BLOCKING BETWEEN FULL HEIGHT STUDS TO TOP PLATE BEYOND w/ CONT. STRAP PER DETAIL. EXTEND STRAP 36" PAST END OF FULL HEIGHT STUDS
20. STRAP TOP PLATE TO TOP PLATE AT EA. SIDE OF COLUMN w/ CS16x28" w/ (40) 10d
21. STRAP TOP PLATE TO TOP PLATE AT EA. SIDE OF COLUMN w/ (2) CS16x28" w/ (40) 10d
22. STRAP TOP PLATE TO TOP PLATE AT EA. SIDE OF COLUMN w/ CMST12x12" w/ (148) 16d
23. STRAP BEAM TO TOP PLATE w/ CS14x30" w/ (52) 10d

1. 1-JOIST BLOCKING ALIGNED UNDER MANSARD WALL ABOVE
2. SPA BY OTHERS (MAX. WT. = 12.5k). WATERPROOFING AT POOL DECK PER ARCH'L. SPA MFR. TO PROVIDE ATTACHMENT OF SPA TO FRAMING.
3. STAIR BY OTHERS
4. 6x8 TRELLIS MEMBERS AT 1'-6" o.c. w/ SIMPSON HUC68 HANGERS.
5. ALIGN DBL JOIST UNDER MANSARD WALL OR THICKENED WALL ABOVE.
6. SPA BY OTHERS (MAX. WT. = 15.8k). WATERPROOFING AT POOL DECK PER ARCH'L. SPA MFR. TO PROVIDE ATTACHMENT OF SPA TO FRAMING.
7. 2x6 ROOF RAFTERS AT 12" o.c. w/ SIMPSON U26 HANGERS
8. STRAP BEAM TO TOP PLATE w/ (2) CS14x30" w/ (52) 10d
9. ALIGN w/ STRAP FROM ABOVE
10. BOUNDARY FASTEN ALONG BEAM/JOIST/RAFTER
11. ATTACH HEADER TO TS w/ CS16x18" w/ (32) 10d. ATTACH TS TO KS w/ (3) LTP4 CLIPS, EVENLY SPACED
12. EXTEND STRAPS FROM ABOVE TO BOTTOM OF BEAM. USE (16) 10d END NAILS AT EA. CS14 STRAP
13. ATTACH HIGH BEAM TO 6x6 CRIPPLE POST w/ (2) MTS12 TWIST STRAPS. ATTACH CRIPPLE POST TO HEADER w/ (2) MST12 TWIST STRAPS
14. ATTACH HEADER TO TS w/ (3) CS16x22" w/ (40) 10d. ATTACH TS TO KS w/ (7) LTP4 CLIPS, EVENLY SPACED
15. NOT USED

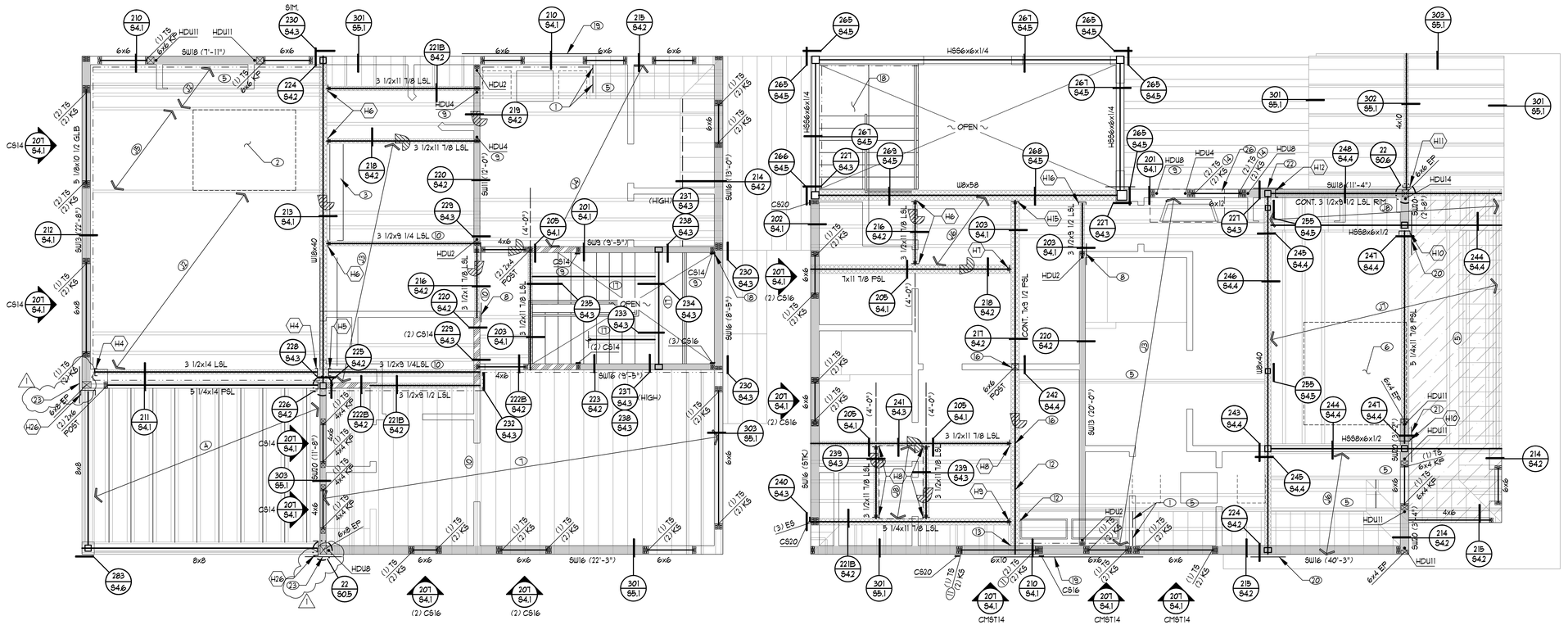

SCALE: 1/4"=1'-0"

3RD FLOOR & LOW ROOF FRAMING PLAN

NORTH

WRIGHT STRUCTURAL ENGINEERS
ENGINEERED IN THE USA
2 Venture, Suite 200
Irvine, CA 92618
phone (949) 477-4001
CA@wrightengineers.com
wrightengineers.com
Las Vegas | Orange County | Phoenix | Salt Lake City | Dallas

LICENSED PROFESSIONAL ENGINEER
PHOENIX S. ALLEN
No.S5460
STRUCTURAL
STATE OF CALIFORNIA
9/21/2023

HELIOTROPE DUPLEX
407 Heliotrope Ave.
Corona Del Mar, CA 92625

COPYRIGHT (C) WRIGHT ENGINEERS. USE OF THIS DRAWING AND ANY REPRODUCTIONS SHALL BE RESTRICTED TO THE ORIGINAL SITE FOR WHICH IT WAS PREPARED. REPRODUCTION OR RE-USE OF THIS DRAWING FOR ANY OTHER PURPOSE IS STRICTLY PROHIBITED.

NUMBER	DATE	DESCRIPTION
1	09-21-2023	PLAN CHECK REVISIONS

DATE: May 25, 2023
DESIGN BY: RO
PROJECT MGR: RO
PROJECT NO: 220376

3RD FLOOR & LOW ROOF FRAMING PLAN

S22-220376-PF3

S2.2

REFER TO SHEET S03 FOR FRAMING PLAN NOTES AND SCHEDULES

ROOF FRAMING PLAN KEYNOTES

1. 4x6 ROOF RAFTERS AT 16" o.c. w/ SIMPSON U46 HANGERS
2. 2x6 ROOF RAFTERS AT 12" o.c. w/ SIMPSON U26 HANGERS
3. DOUBLE RAFTER w/ SIMPSON U26-2 HANGER AS REQ'D
4. STRAP BEAM TO TOP PLATES w/ CS16x22" w/ (40) 10d
5. STRAP RAFTER TO RAFTER w/ LSTA12
6. 6x6 CRIPPLE POST, PER DETAIL 308/S5.1
7. 6x4 CRIPPLE POST, PER DETAIL 308/S5.1
8. 4x4 CRIPPLE POST, PER DETAIL 308/S5.1
9. STRAP NAILER TO TOP PLATE w/ CS20x24" w/ (28) 8d
10. STRAP SLOPED TOP PLATE TO FLAT TOP PLATE w/ SIMPSON LSTA18
11. STRAP RAFTER TO RAFTER w/ MSTA30
12. BOUNDARY FASTEN ALONG RAFTER
13. STRAP RAFTER TO RAFTER w/ LSTA30
14. ATTACH CHIMNEY TO ROOF PER DETAIL 323/S5.2

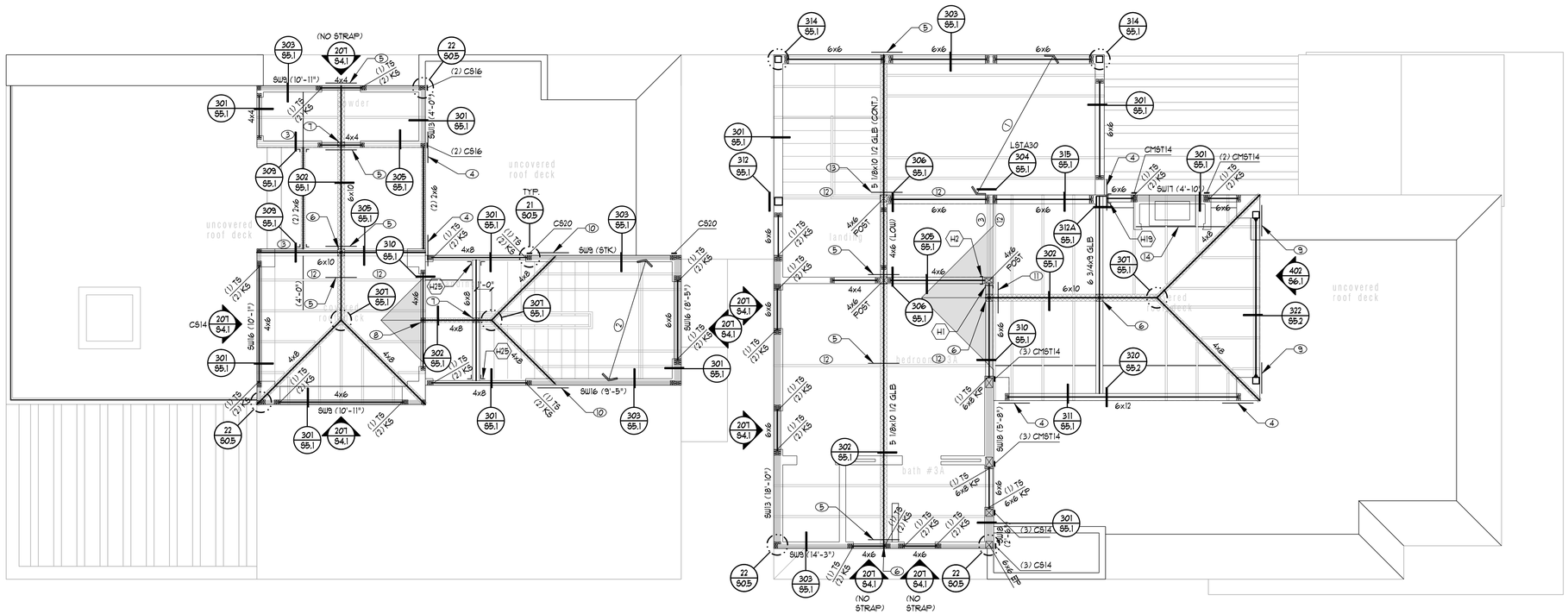

ROOF FRAMING PLAN

SCALE: 1/4"=1'-0"

NORTH

WRIGHT STRUCTURAL ENGINEERS
ENGINEERED IN THE USA
2 Venture, Suite 200
Irvine, CA 92618
(949) 747-4001
DA@wrightengineers.com
wrightengineers.com
Las Vegas | Orange County | Phoenix | Salt Lake City | Dallas

LICENSED STRUCTURAL ENGINEER * DAVID ALLEN * No.S5460 * STATE OF CALIFORNIA *
9/21/2023

HELIOTROPE DUPLEX
407 Heliotrope Ave.
Corona Del Mar, CA 92625

COPYRIGHT (C) WRIGHT ENGINEERS, USE OF THIS DRAWING AND ANY REPRODUCTIONS SHALL BE RESTRICTED TO THE ORIGINAL SITE FOR WHICH IT WAS PREPARED. REPRODUCTION OR RE-USE OF THIS DRAWING FOR ANY OTHER PURPOSE IS STRICTLY PROHIBITED.

NUMBER	DATE	DESCRIPTION
1	09-21-2023	PLAN CHECK REVISIONS

DATE: May 25, 2023
DESIGN BY: RO
PROJECT MGR: RO
PROJECT NO: 220376

ROOF FRAMING PLAN

S23-220376-PR

S2.3

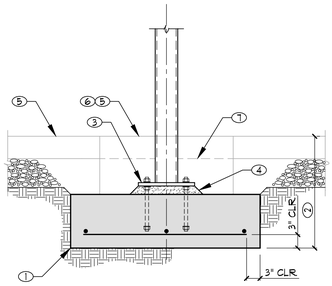

1. FOOTING SIZE AND REINF. PER FOOTING SCHEDULE U.N.O.
2. SEE FOUNDATION PLAN NOTES OR PLAN(S) FOR MIN. EMBEDMENT OR T.O.F. ELEVATION
3. BASE PLATE w/ ANCHOR RODS PER STEEL COLUMN SCHEDULE U.N.O.
4. GROUT BELOW BASE PLATE PER G.S.N. AND APPLICABLE COLUMN BASE PLATE DETAIL
5. SLAB ON GRADE (AS OCCURS) AND CLOSURE POUR BY OTHERS. CLOSURE POUR SHALL PROVIDE 3" MIN. CLR. COVER TO BASE PLATE AND ANCHOR RODS
6. PLACE CLOSURE POUR AFTER COMPLETION OF STRUCTURAL FRAMING ABOVE (i.e., ELEVATED FLOOR/ ROOF FRAMING, ELEVATED SLABS AND DECKS, ETC.)
7. LINE OF SLAB BEYOND

111 STEEL COLUMN AT FOOTING

5F01-24-H56 170619 — NO SCALE

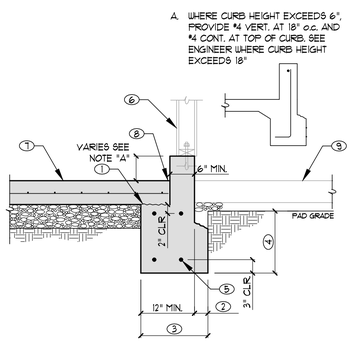

1. OPTIONAL POUR JOINT
2. 3" MIN. WIDENED FOOTING AS REQ'D. FOR FORM STAKE
3. WIDTH PER PLAN OR SCHEDULE. 15" MIN.
4. MINIMUM EMBEDMENT PER FOUNDATION PLAN NOTES
5. FOOTING REINFORCING PER PLAN OR SCHEDULE
6. FRAMING ABOVE AND ANCHORAGE TO SLAB AS OCCURS
7. SLAB THICKNESS AND REINFORCING PER FOUNDATION PLAN NOTES
8. 3/8" MIN. EXPANSION JOINT w/ JOINT FILLER
9. FLATWORK BY OTHERS

112 TYPICAL CURB AT EDGE OF SLAB

112-220376 — NO SCALE

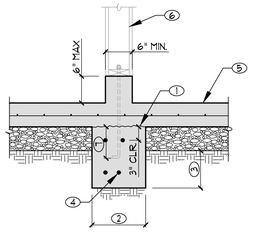

1. OPTIONAL POUR JOINT
2. WIDTH PER PLAN OR SCHEDULE. 15" MIN.
3. MINIMUM EMBEDMENT PER FOUNDATION PLAN NOTES
4. FOOTING REINFORCING PER PLAN OR SCHEDULE
5. SLAB THICKNESS AND REINFORCING PER FOUNDATION PLAN NOTES
6. FRAMING ABOVE AND ANCHORAGE TO SLAB AS OCCURS
7. AT OPTIONAL POUR JOINT, ANCHOR BOLTS SHALL BE LENGTHENED AS NECESSARY TO EXTEND 7" MIN INTO FIRST POUR

113 INTERIOR CURB STUD WALL AT FOOTING

113-220376 — NO SCALE

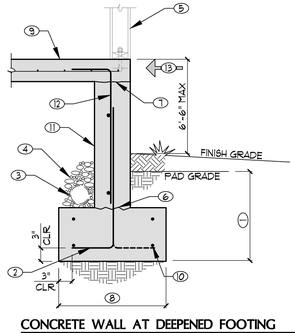

1. MINIMUM EMBEDMENT PER PLAN
2. DOWEL TO MATCH AND LAP VERT. REINFORCING, ALTERNATE BEND'S
3. DRAINAGE SYSTEM BY OTHERS
4. FREE-DRAINING GRANULAR BACKFILL
5. FRAMING ABOVE AS OCCURS
6. POUR JOINT, ROUGHEN SURFACE TO 1/4" AMPLITUDE
7. OPTIONAL POUR JOINT
8. WIDTH PER PLAN OR SCHEDULE. 15" MIN.
9. SLAB THICKNESS AND REINFORCING PER FOUNDATION PLAN NOTES
10. FOOTING REINFORCING PER PLAN OR SCHEDULE
11. 8" THICK CONCRETE WALL w/ #5 BARS AT 18" o.c. HORIZ
12. #5 DOWELS AT 18" o.c. VERT

114 CONCRETE WALL AT DEEPENED FOOTING

114-220376 — NO SCALE

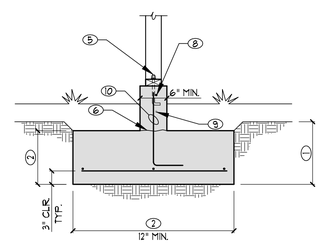

B AT PEDESTALS 12" OR LESS IN WIDTH

1. MINIMUM EMBEDMENT PER FOUNDATION PLAN NOTES. WHERE GRADE SLOPES OR MAY CHANGE, INCREASE EMBEDMENT SUFFICIENTLY TO PREVENT INTERFERENCE W/ FLATWORK AND FOOTING EXPOSURE AT FINAL GRADE

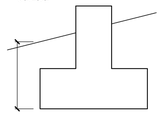

2. FOOTING DIMENSION AND REINFORCING PER PLAN OR SCHEDULE. WHERE NOT SPECIFIED ON PLAN OR SCHEDULE, FOOTING SHALL EXTEND 6" MIN. BEYOND EDGE OF COLUMN AND SHALL BE 12" THICK MIN. w/ #4 AT 12" o.c. E.W. BOTTOM
3. #4 DOWEL AT 24" o.c. MAX (4 MIN.) AROUND PERIMETER OF PEDESTAL
4. (2) #4 OR (3) #3 CLOSED TIES WITHIN 5" OF THE TOP OF PEDESTAL AROUND ANCHOR BOLTS AND DOWELS
5. SOLE PLATE w/ ANCHORAGE PER G.S.N. SIMPSON MASA STRAPS MAY BE USED AS AN ALTERNATE TO ANCHOR BOLTS
6. OPT. POUR JOINT, ROUGHEN SURFACE TO 1/4" AMPLITUDE
7. AT PEDESTAL WIDTHS GREATER THAN 2'-0", PROVIDE #4 AT 12" o.c. E.W. AT TOP PEDESTAL
8. #4 CONT. AT TOP OF PEDESTAL
9. AT PEDESTALS HEIGHTS GREATER THAN 12", #4 CONT. AT 12" o.c. ALONG THE PEDESTAL HEIGHT
10. #4 DOWELS AT 12" o.c. MAX. (MIN. (2))

A. PEDESTAL HEIGHT IS MEASURED FROM TOP OF FOOTING TO TOP OF PEDESTAL.

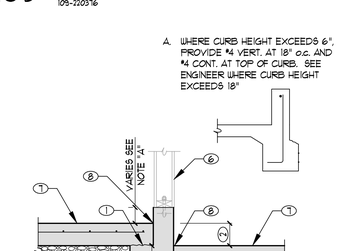

A AT PEDESTALS WIDER THAN 12"

108 WOOD BOX COLUMN AT FOOTING

UF01-19 210623 — NO SCALE

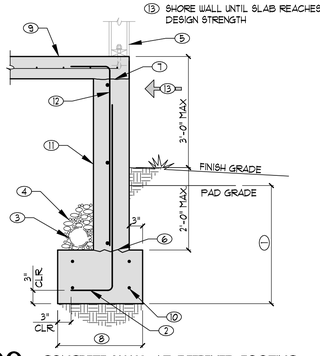

1. MINIMUM EMBEDMENT PER PLAN
2. DOWEL TO MATCH AND LAP VERT. REINFORCING
3. DRAINAGE SYSTEM BY OTHERS
4. FREE-DRAINING GRANULAR BACKFILL
5. FRAMING ABOVE AS OCCURS
6. POUR JOINT, ROUGHEN SURFACE TO 1/4" AMPLITUDE
7. OPTIONAL POUR JOINT
8. WIDTH PER PLAN OR SCHEDULE. 15" MIN.
9. SLAB THICKNESS AND REINFORCING PER FOUNDATION PLAN NOTES
10. FOOTING REINFORCING PER PLAN OR SCHEDULE
11. 8" THICK CONCRETE WALL w/ #5 BARS AT 18" o.c. HORIZ
12. #5 DOWELS AT 18" o.c. VERT

109 CONCRETE WALL AT DEEPENED FOOTING

109-220376 — NO SCALE

1. OPTIONAL POUR JOINT
2. SLAB STEP PER ARCH'L. 1'-0" " MAX.
3. WIDTH PER PLAN OR SCHEDULE, 15" MIN.
4. MINIMUM EMBEDMENT PER FOUNDATION PLAN NOTES
5. FOOTING REINFORCING PER PLAN OR SCHEDULE
6. FRAMING ABOVE AND ANCHORAGE TO SLAB AS OCCURS
7. SLAB THICKNESS AND REINFORCING PER FOUNDATION PLAN NOTES
8. 3/8" MIN. EXPANSION JOINT w/ JOINT FILLER

110 TYPICAL FOOTING AT STEP IN SLAB

110-220376 — NO SCALE

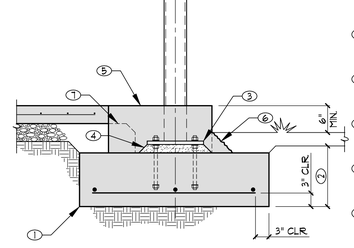

1. FOOTING SIZE AND REINF. PER FOOTING SCHEDULE U.N.O.
2. SEE FOUNDATION PLAN NOTES OR PLAN(S) FOR MIN. EMBEDMENT OR T.O.F. ELEVATION
3. BASE PLATE w/ ANCHOR RODS PER STEEL COLUMN SCHEDULE U.N.O.
4. GROUT BELOW BASE PLATE PER G.S.N. AND APPLICABLE COLUMN BASE PLATE DETAIL
5. COLUMN ISOLATION JOINT AND CLOSURE POUR PER TYPICAL DETAIL
6. CLOSURE POUR SHALL PROVIDE 3" MIN. CLR. COVER TO BASE PLATE AND ANCHOR RODS
7. LINE OF SLAB AND TURNED DOWN EDGE BEYOND

105 STEEL COLUMN AT FOOTING

5F01-17-H56 170619 — NO SCALE

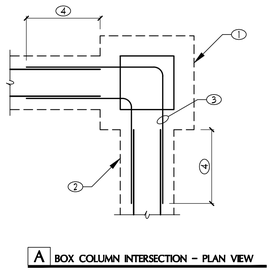

A BOX COLUMN INTERSECTION – PLAN VIEW

1. FOOTING AND REINFORCING PER PLAN
2. GRADE BEAM AND REINFORCING PER PLAN
3. #5 BAR, TO MATCH AND LAP GRADE BEAM REINFORCING, TYP.
4. 30" LAP LENGTH, TYP.

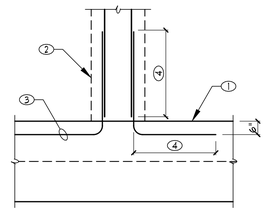

B SLAB INTERSECTION – PLAN VIEW

REGISTERED PROFESSIONAL ENGINEER ROBERT J. MCCARTHY No. 2490 Exp. 3/31/25 GEOTECHNICAL STATE OF CALIFORNIA
Signed 10/25/2023

REVIEW IS SUBJECT TO THE LIMITATIONS STATED IN THE REPORT DATED 5-5-2022, FILE NO: 8677-10 REPORT NO: R1-8677 R MCCARTHY CONSULTING, INC.

106 GRADE BEAM AT FOOTING

106-220376 — NO SCALE

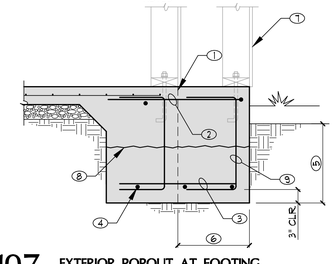

8. OPTIONAL POUR JOINT. ROUGHEN SURFACE TO 1/4" AMPLITUDE
9. #4 "C" DOWELS AT 48" o.c. MAX. MIN. (2) DOWELS PER POPOUT

A. SEE TYPICAL EDGE OF SLAB DETAILS FOR INFO. SHOWN BUT NOT NOTED

1. LINE OF CONT. FOOTING BEYOND
2. #4 BENT DOUEL AT PERIMETER OF POPOUT
3. #4 AT 12" o.c. EACH WAY BOTTOM
4. CONT. REINFORCING FROM BEYOND
5. MIN. EMBEDMENT PER FOUNDATION PLAN NOTES OR PLAN(S)
6. SEE ARCH'L FOR POPOUT DIMENSIONS AND ADDITIONAL INFO.
7. FRAMING AND ANCHORAGE TO SLAB OR POPOUT AS OCCURS. SEE G.S.N. OR SHEARWALL SCHEDULE FOR ANCHORAGE REQUIREMENTS

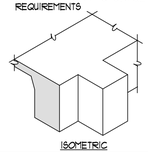

ISOMETRIC

107 EXTERIOR POPOUT AT FOOTING

UF01-11 170619 — NO SCALE

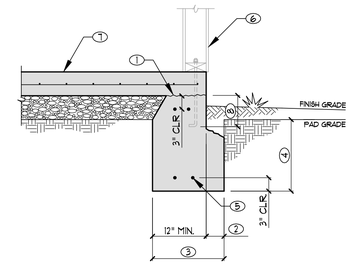

1. OPTIONAL POUR JOINT
2. 3" MIN. WIDENED FOOTING AS REQ'D. FOR FORM STAKE
3. WIDTH PER PLAN OR SCHEDULE. 15" MIN.
4. MINIMUM EMBEDMENT PER FOUNDATION PLAN NOTES
5. FOOTING REINFORCING PER PLAN OR SCHEDULE
6. FRAMING ABOVE AND ANCHORAGE TO SLAB AS OCCURS
7. SLAB THICKNESS AND REINFORCING PER FOUNDATION PLAN NOTES
8. AT OPTIONAL POUR JOINT, ANCHOR BOLTS SHALL BE LENGTHENED AS NECESSARY TO EXTEND 7" MIN INTO FIRST POUR

101 TYPICAL EDGE OF SLAB

101-220376 — NO SCALE

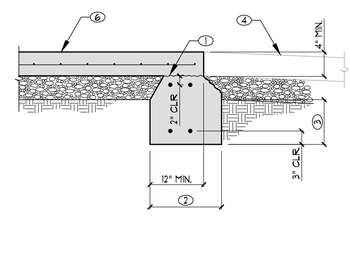

1. OPTIONAL POUR JOINT
2. WIDTH PER PLAN OR SCHEDULE. 15" MIN.
3. MINIMUM EMBEDMENT PER FOUNDATION PLAN NOTES
4. TOP OF EXTERIOR SLAB
5. FOOTING REINFORCING PER PLAN OR SCHEDULE
6. SLAB THICKNESS AND REINFORCING PER FOUNDATION PLAN NOTES

102 TYPICAL DEPRESSED EDGE OF SLAB

102-220376 — NO SCALE

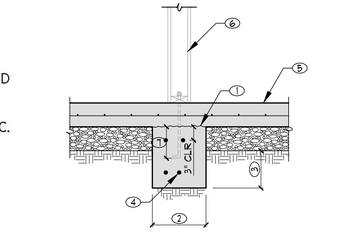

1. OPTIONAL POUR JOINT
2. WIDTH PER PLAN OR SCHEDULE. 15" MIN.
3. MINIMUM EMBEDMENT PER FOUNDATION PLAN NOTES
4. FOOTING REINFORCING PER PLAN OR SCHEDULE
5. SLAB THICKNESS AND REINFORCING PER FOUNDATION PLAN NOTES
6. FRAMING ABOVE AND ANCHORAGE TO SLAB AS OCCURS
7. AT OPTIONAL POUR JOINT, ANCHOR BOLTS SHALL BE LENGTHENED AS NECESSARY TO EXTEND 7" MIN INTO FIRST POUR

103 INTERIOR STUD WALL AT FOOTING

103-220376 — NO SCALE

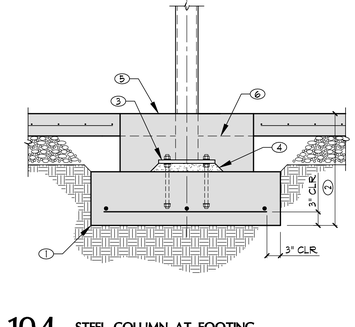

1. FOOTING SIZE AND REINF. PER FOOTING SCHEDULE U.N.O.
2. SEE FOUNDATION PLAN NOTES OR PLAN(S) FOR MIN. EMBEDMENT OR T.O.F. ELEVATION
3. BASE PLATE w/ ANCHOR RODS PER STEEL COLUMN SCHEDULE U.N.O.
4. GROUT BELOW BASE PLATE PER G.S.N. AND APPLICABLE COLUMN BASE PLATE DETAIL
5. COLUMN ISOLATION JOINT AND CLOSURE POUR PER TYPICAL DETAIL
6. LINE OF SLAB BEYOND

104 STEEL COLUMN AT FOOTING

5F01-19-H56 170619 — NO SCALE

WRIGHT STRUCTURAL ENGINEERS
ENGINEERED IN THE USA
2 Venture, Suite 200
Irvine, CA 92618
(949) 727-9093 FAX (949) 727-9001
DA@wrightengineers.com
wrightengineers.com
Las Vegas | Orange County | Phoenix | Salt Lake City | Dallas

LICENSED STRUCTURAL ENGINEER ALLEN No.S5460 STATE OF CALIFORNIA 9/21/2023

HELIOTROPE DUPLEX
407 Heliotrope Ave.
Corona Del Mar, CA 92625

COPYRIGHT (C) WRIGHT ENGINEERS. USE OF THIS DRAWING AND ANY REPRODUCTIONS SHALL BE RESTRICTED TO THE ORIGINAL SITE FOR WHICH IT WAS PREPARED. REPRODUCTION OR RE-USE OF THIS DRAWING FOR ANY OTHER PURPOSE IS STRICTLY PROHIBITED.

NUMBER	DATE	DESCRIPTION
1	09-21-2023	PLAN CHECK REVISIONS

DATE: May 25, 2023
DESIGN BY: RO
PROJECT MGR: RO
PROJECT NO: 220376

FOUNDATION DETAILS

S31-220376-D

S3.1

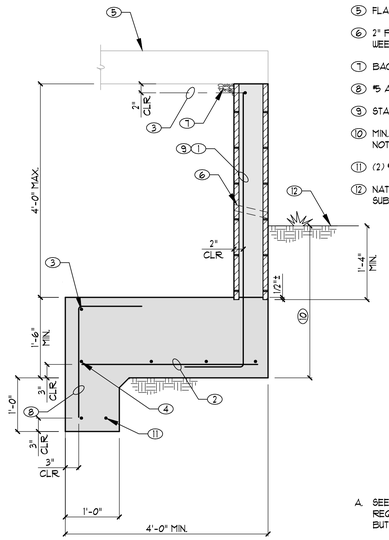

1. #5 VERT. BARS AT 48" o.c.
2. #5 TRANS AT 48" o.c.
3. (1) #5 CONT.
4. #5 CONT AT 16" o.c.
5. FLATWORK BY OTHERS
6. 2" PVC PIPE AT 4'-0" o.c. FOR WEEPERS
7. BACKFILL PER G.S.N.
8. #5 AT 48" o.c.
9. STANDARD HOOK INTO FOOTING
10. MIN. EMBEDMENT PER SITE PLAN NOTES
11. (2) #5 CONT.
12. NATURAL GRADE OR COMPACTED SUBGRADE

A. SEE G.S.N. FOR ADDITIONAL REQUIREMENTS AND ITEMS SHOWN BUT NOT NOTED

B. GROUT WALL SOLID

C. ALL REBAR LAP LENGTHS PER SCHEDULE, U.N.O.

D. RETAINING WALL SHALL NOT BE USED IN A STACKED CONFIGURATION OR AS A FLOOD WALL OR OTHERWISE SURCHARGED UNLESS SPECIFICALLY NOTED. SEE G.S.N. FOR CLARIFICATION

120 4'-0" TALL RETAINING WALL UNDER STAIR

120-220376 NO SCALE

DETAIL NAME	MAX. 8" C.M.U. HEIGHT	1 VERT. BARS AT 8" C.M.U.	2 TRANS BARS AT TOP	8 KEY REINFORCING	MIN. FOOTING WIDTH	TOE LENGTH	KEY WIDTH	KEY DEPTH
A	5'-3"	#5 AT 16" o.c.	#5 AT 32" o.c.	#5 AT 32" o.c.	5'-0"	1'-0"	1'-10"	2'-4"
B	3'-0"	#5 AT 48" o.c.	#5 AT 48" o.c.	#5 AT 48" o.c.	2'-3"	N/A	1'-0"	1'-5"

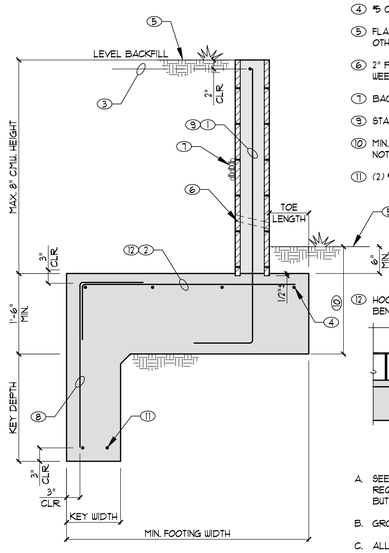

3. (1) #5 CONT.
4. #5 CONT. AT 16" o.c.
5. FLATWORK OR FINISH GRADE BY OTHERS
6. 2" PVC PIPE AT 4'-0" o.c. FOR WEEPERS
7. BACKFILL PER G.S.N.
9. STANDARD HOOK INTO FOOTING
10. MIN. EMBEDMENT PER SITE PLAN NOTES
11. (2) #5 CONT.
12. HOOK END OF TRANS. TOP BAR BENEATH WALL AS SHOWN BELOW

A. SEE G.S.N. FOR ADDITIONAL REQUIREMENTS AND ITEMS SHOWN BUT NOT NOTED

B. GROUT WALL SOLID

C. ALL REBAR LAP LENGTHS PER SCHEDULE, U.N.O.

D. RETAINING WALL SHALL NOT BE USED IN A STACKED CONFIGURATION OR AS A FLOOD WALL OR OTHERWISE SURCHARGED UNLESS SPECIFICALLY NOTED. SEE G.S.N. FOR CLARIFICATION

121 RETAINING WALL (KEY AT HEEL)

121-220376 NO SCALE

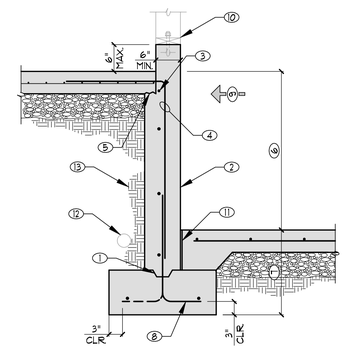

1. CONT. 2x6 TAPERED KEY
2. 8" (MIN.) CONCRETE WALL w/ #5 AT 18" o.c. HORIZ. CENTERED IN WALL
3. #5 CONTINUOUS EDGE BAR
4. #5 DOUEL AT 18" o.c.
5. OPTIONAL FOUR JOINT
6. HEIGHT PER ARCH'L 5'-9" MAX.
7. SEE FOUNDATION PLAN NOTES OR PLAN(S) FOR MINIMUM EMBEDMENT
8. DOUEL TO MATCH AND LAP VERT. REINFORCING, ALTERNATE BENDS
9. SHORE WALL UNTIL SLAB REACHES DESIGN STRENGTH
10. FRAMING ABOVE AS OCCURS
11. 3/8" MIN. FELT EXPANSION JOIST PER GEOTECHNICAL REPORT
12. DRAINAGE BY OTHERS
13. BACKFILL PER G.S.N.

117 CONCRETE SLAB AT CONCRETE WALL

117-220376 NO SCALE

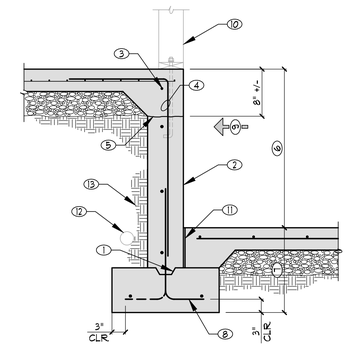

1. CONT. 2x6 TAPERED KEY
2. 8" (MIN.) CONCRETE WALL w/ #5 AT 18" o.c. HORIZ. CENTERED IN WALL
3. #5 CONTINUOUS EDGE BAR
4. #5 DOUEL AT 18" o.c.
5. OPTIONAL FOUR JOINT
6. HEIGHT PER ARCH'L 5'-9" MAX.
7. SEE FOUNDATION PLAN NOTES OR PLAN(S) FOR MINIMUM EMBEDMENT
8. DOUEL TO MATCH AND LAP VERT. REINFORCING, ALTERNATE BENDS
9. SHORE WALL UNTIL SLAB REACHES DESIGN STRENGTH
10. FRAMING ABOVE AS OCCURS
11. 3/8" MIN. FELT EXPANSION JOIST PER GEOTECHNICAL REPORT
12. DRAINAGE BY OTHERS
13. BACKFILL PER G.S.N.

118 CONCRETE SLAB AT CONCRETE WALL

118-220376 NO SCALE

DETAIL NAME	MAX. 8" C.M.U. HEIGHT	MAX (E) WALL HEIGHT	1 VERT. BARS AT 8" C.M.U.	8 KEY REINFORCING	MIN. FOOTING WIDTH	KEY WIDTH	KEY DEPTH
A	1'-6"	3'-0"	#5 AT 48" o.c.	#5 AT 48" o.c.	2'-3"	1'-0"	1'-4"
B	3'-6"	4'-0"	#5 AT 48" o.c.	#5 AT 48" o.c.	3'-4"	1'-0"	1'-4"
C	4'-3"	5'-6"	#5 AT 32" o.c.	#5 AT 32" o.c.	3'-7"	1'-8"	2'-4"
D	3'-9"	6'-5"	#5 AT 32" o.c.	#5 AT 32" o.c.	2'-8"	1'-8"	2'-6"

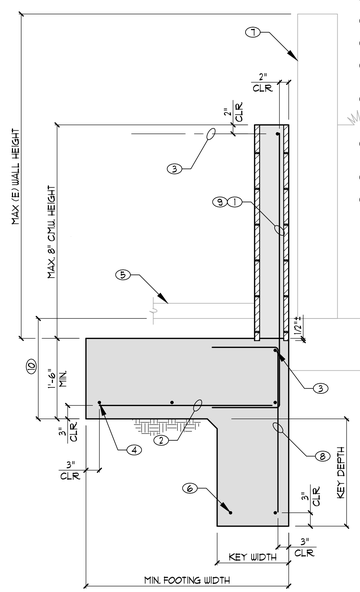

2. #5 TRANS AT 48" o.c.
3. (1) #5 CONT.
4. #5 CONT AT 16" o.c.
5. FLATWORK OR FINISH GRADE BY OTHERS
6. (2) #5 CONT.
7. (E) RETAINING WALL AT ADJACENT PROPERTY
9. STANDARD HOOK INTO FOOTING
10. MIN. EMBEDMENT PER SITE PLAN NOTES

A. SEE G.S.N. FOR ADDITIONAL REQUIREMENTS AND ITEMS SHOWN BUT NOT NOTED

B. GROUT WALL SOLID

C. ALL REBAR LAP LENGTHS PER SCHEDULE, U.N.O.

D. RETAINING WALL SHALL NOT BE USED IN A STACKED CONFIGURATION OR AS A FLOOD WALL OR OTHERWISE SURCHARGED UNLESS SPECIFICALLY NOTED. SEE G.S.N. FOR CLARIFICATION

E. CONTRACTOR TO SHORE AND SUPPORT (E) RETAINING WALLS

119 RETAINING WALL ADJACENT TO (E) RETAINING WALL

119-220376 NO SCALE

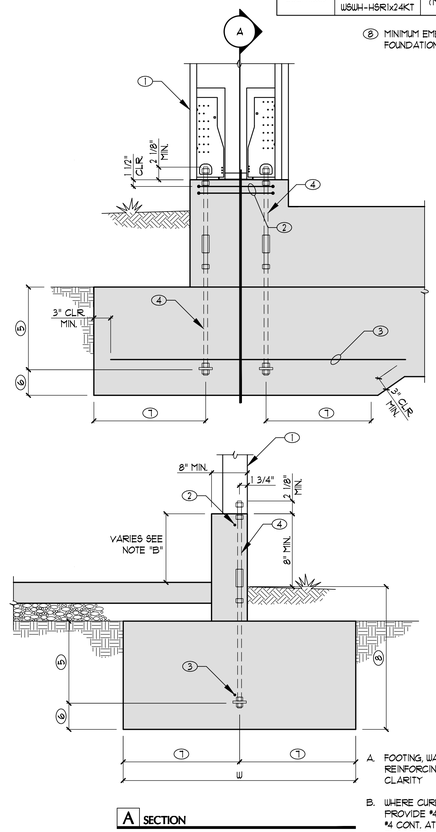

A. FOOTING, WALL, AND SLAB REINFORCING NOT SHOWN FOR CLARITY

B. WHERE CURB HEIGHT EXCEEDS 6", PROVIDE #4 VERT. AT 18" o.c. AND #4 CONT. AT TOP OF CURB. SEE ENGINEER WHERE CURB HEIGHT EXCEEDS 18"

C. DO NOT NOTCH CURB AT W&W

D. TRIM W&W-HSR EXTENSION KIT AS REQ'D

A SECTION

1. SIMPSON WOOD STRONG-WALL PER PLAN
2. (2) #5 TIES
3. #4 LONGITUDINAL BAR TIE ANCHOR BOLTS TO REINFORCING AS REQ'D. FOR ACCURATE PLACEMENT

WALL PANEL	4 ANCHOR BOLT	5 "de"	6	7 "1/2W"
W&WH12x8	W&WH-AB1x24 + W&WH-HSR1x24KT	11" (MIN.)	6" (MIN.)	16.5" (W=33")
W&WH18x8	W&WH-AB1x24HS + W&WH-HSR1x24KT	18" (MIN.)	6" (MIN.)	26" (W=52")

8. MINIMUM EMBEDMENT PER FOUNDATION PLAN NOTES

115 SIMPSON WOOD STRONG-WALL AT FOUNDATION

115-220376 NO SCALE

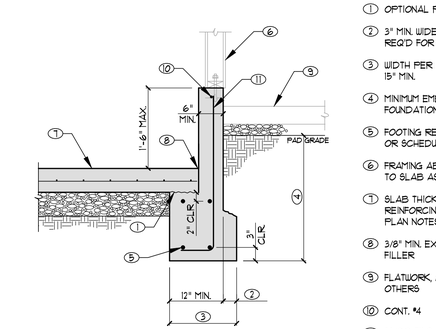

1. OPTIONAL FOUR JOINT
2. 3" MIN. WIDENED FOOTING AS REQ'D FOR FORM STAKE
3. WIDTH PER PLAN OR SCHEDULE. 15" MIN.
4. MINIMUM EMBEDMENT PER FOUNDATION PLAN NOTES
5. FOOTING REINFORCING PER PLAN OR SCHEDULE
6. FRAMING ABOVE AND ANCHORAGE TO SLAB AS OCCURS
7. SLAB THICKNESS AND REINFORCING PER FOUNDATION PLAN NOTES
8. 3/8" MIN. EXPANSION JOINT w/ JOINT FILLER
9. FLATWORK, AS OCCURS, BY OTHERS
10. CONT. #4
11. #4 DOUELS AT 18" o.c.

116 1'-6" CURB AT EDGE OF SLAB

116-220376 NO SCALE

REGISTERED PROFESSIONAL ENGINEER — ROBERT J. McCARTHY — No. 2490 — Exp. 3/31/25 — GEOTECHNICAL — STATE OF CALIFORNIA

Signed 10/25/2023

REVIEW IS SUBJECT TO THE LIMITATIONS STATED IN THE REPORT DATED 5-5-2022, FILE NO: 8677-10 REPORT NO: R1-8677 R MCCARTHY CONSULTING, INC.

WRIGHT STRUCTURAL ENGINEERS
ENGINEERED IN THE USA
2 Venture, Suite 200
Irvine, CA 92618
(949) 727-4001
CA@wrightengineers.com
wrightengineers.com
Las Vegas | Orange County | Phoenix | Salt Lake City | Dallas

LICENSED PROFESSIONAL ENGINEER — ALLEN — No.55460 — STRUCTURAL — STATE OF CALIFORNIA — 9/21/2023

HELIOTROPE DUPLEX
407 Heliotrope Ave.
Corona Del Mar, CA 92625

COPYRIGHT (C) WRIGHT ENGINEERS. USE OF THIS DRAWING AND ANY REPRODUCTIONS SHALL BE RESTRICTED TO THE ORIGINAL SITE FOR WHICH IT WAS PREPARED. REPRODUCTION OR RE-USE OF THIS DRAWING FOR ANY OTHER PURPOSE IS STRICTLY PROHIBITED.

NUMBER	DATE	DESCRIPTION
1	09-21-2023	PLAN CHECK REVISIONS

DATE: May 25, 2023
DESIGN BY: RO
PROJECT MGR: RO
PROJECT NO: 220376

FOUNDATION DETAILS

S32-220376-D

S3.2

DETAIL NAME	MAX. TALL 8" C.M.U. HEIGHT	MAX. SHORT 8" C.M.U. HEIGHT	① VERT. BARS AT 8" C.M.U.	⑧ KEY REINFORCING	KEY WIDTH	KEY DEPTH	⑫ MAX. HEIGHT OF ADJACENT GRADE
A	9'-4"	3'-0"	#5 AT 8" o.c.	#5 AT 32" o.c.	3'-4"	3'-6"	5'-10"
B	8'-1"	3'-6"	#5 AT 16" o.c.	#5 AT 32" o.c.	2'-0"	2'-6"	4'-1"

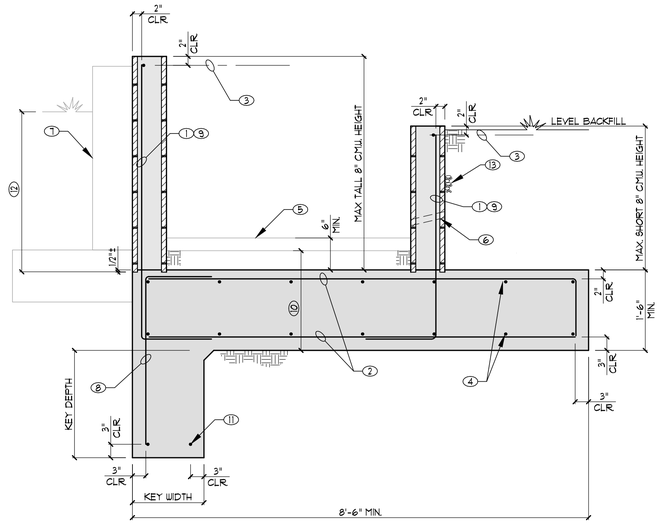

② #5 TRANS AT 32" o.c.
③ (1) #5 CONT.
④ #5 CONT AT 16" o.c.
⑤ FLATWORK BY OTHERS
⑥ 2" PVC PIPE AT 4'-0" o.c. FOR WEEPERS
⑦ (E) RETAINING WALL AT ADJACENT PROPERTY
⑨ STANDARD HOOK INTO FOOTING
⑩ MIN. EMBEDMENT PER SITE PLAN NOTES
⑪ (2) #5 CONT.
⑬ BACKFILL PER G.S.N.
⑭ HOOK END OF TRANS. TOP BAR BENEATH WALL AS SHOWN BELOW

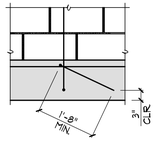

A. SEE G.S.N. FOR ADDITIONAL REQUIREMENTS AND ITEMS SHOWN BUT NOT NOTED
B. GROUT WALL SOLID
C. ALL REBAR LAP LENGTHS PER SCHEDULE, U.N.O.
D. RETAINING WALL SHALL NOT BE USED IN A STACKED CONFIGURATION OR AS A FLOOD WALL OR OTHERWISE SURCHARGED UNLESS SPECIFICALLY NOTED. SEE G.S.N. FOR CLARIFICATION
E. CONTRACTOR TO SHORE AND SUPPORT (E) RETAINING WALLS

125 DOUBLE RETAINING WALL ADJACENT TO (E) RETAINING WALL

125-220376 NO SCALE

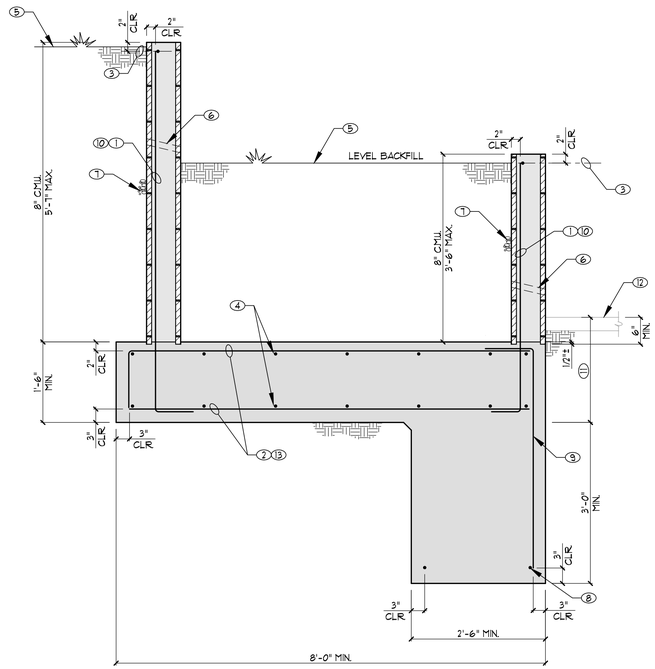

① #5 AT 24" o.c. VERT.
② #5 AT 24" o.c. TRANS.
③ (1) #5 CONT.
④ #5 CONT. AT 16" o.c.
⑤ NATURAL GRADE OR COMPACTED SUBGRADE
⑥ 2" PVC PIPE AT 4'-0" o.c. FOR WEEPERS
⑦ BACKFILL PER G.S.N.
⑧ (2) #5 CONT.
⑨ #5 AT 48" o.c.
⑩ STANDARD HOOK INTO FOOTING
⑪ MIN. EMBEDMENT PER SITE PLAN NOTES
⑫ (E) ROAD
⑬ HOOK END OF TRANS. TOP BAR BENEATH WALL AS SHOWN BELOW

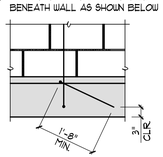

A. SEE G.S.N. FOR ADDITIONAL REQUIREMENTS AND ITEMS SHOWN BUT NOT NOTED
B. GROUT WALL SOLID
C. ALL REBAR LAP LENGTHS PER SCHEDULE, U.N.O.

126 DOUBLE RETAINING WALL

126-220376 NO SCALE

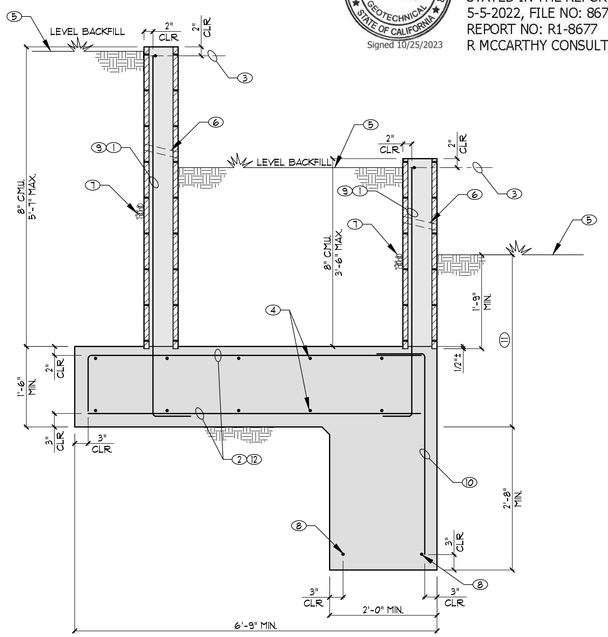

① #5 AT 8" o.c. VERT.
② #5 AT 16" o.c. TRANS.
③ (1) #5 CONT.
④ #5 CONT AT 16" o.c.
⑤ NATURAL GRADE OR COMPACTED SUBGRADE
⑥ 2" PVC PIPE AT 4'-0" o.c. FOR WEEPERS
⑦ BACKFILL PER G.S.N.
⑧ (2) #5 CONT.
⑨ STANDARD HOOK INTO FOOTING
⑩ #5 AT 32" o.c.
⑪ MIN. EMBEDMENT PER SITE PLAN NOTES
⑫ HOOK END OF TRANS. TOP BAR BENEATH WALL AS SHOWN BELOW

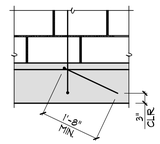

A. SEE G.S.N. FOR ADDITIONAL REQUIREMENTS AND ITEMS SHOWN BUT NOT NOTED
B. GROUT WALL SOLID
C. ALL REBAR LAP LENGTHS PER SCHEDULE, U.N.O.

122 DOUBLE RETAINING WALL

122-220376 NO SCALE

A. SEE G.S.N. FOR ADDITIONAL REQUIREMENTS AND ITEMS SHOWN BUT NOT NOTED
B. GROUT WALL SOLID
C. ALL REBAR LAP LENGTHS PER SCHEDULE, U.N.O.
D. RETAINING WALL SHALL NOT BE USED IN A STACKED CONFIGURATION OR AS A FLOOD WALL OR OTHERWISE SURCHARGED UNLESS SPECIFICALLY NOTED. SEE G.S.N. FOR CLARIFICATION

⑫ HOOK END OF TRANS. TOP BAR BENEATH WALL AS SHOWN BELOW

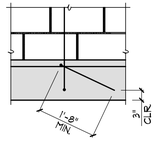

① #5 VERT. BARS AT 48" o.c.
② #5 TRANS AT 48" o.c.
③ (1) #5 CONT.
④ #5 CONT AT 16" o.c.
⑤ FLATWORK BY OTHERS
⑥ 2" PVC PIPE AT 4'-0" o.c. FOR WEEPERS
⑦ BACKFILL PER G.S.N.
⑧ #5 AT 48" o.c.
⑨ STANDARD HOOK INTO FOOTING
⑩ MIN. EMBEDMENT PER SITE PLAN NOTES
⑪ (2) #5 CONT.

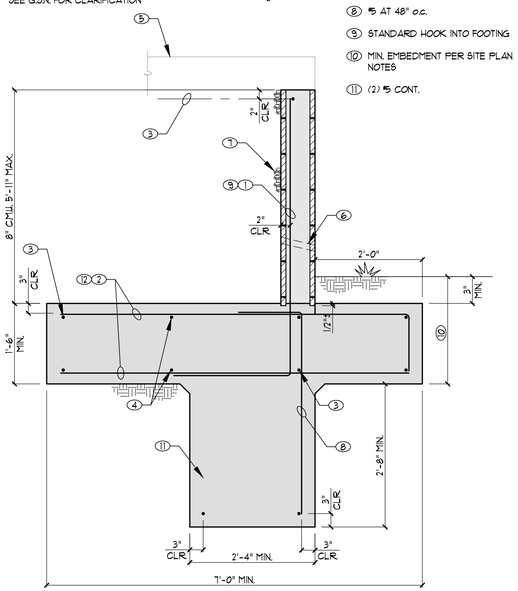

124 5'-11" TALL RETAINING WALL UNDER STAIR

124-220376 NO SCALE

DETAIL NAME	MAX. 8" C.M.U. HEIGHT	① VERT. BARS AT 8" C.M.U.	⑧ KEY REINFORCING	MIN. FOOTING WIDTH	TOE LENGTH	KEY WIDTH	KEY DEPTH	⑫ MIN. SOIL OVER TOE
A	3'-1"	#5 AT 48" o.c.	#5 AT 48" o.c.	3'-0"	1'-0"	1'-0"	1'-2"	6"
B	5'-7"	#5 AT 16" o.c.	#5 AT 16" o.c.	4'-0"	N/A	1'-0"	2'-8"	1'-9"
C	6'-7"	#5 AT 16" o.c.	#5 AT 32" o.c.	5'-0"	3'-0"	2'-0"	3'-0"	8"

A. SEE G.S.N. FOR ADDITIONAL REQUIREMENTS AND ITEMS SHOWN BUT NOT NOTED
B. GROUT WALL SOLID
C. ALL REBAR LAP LENGTHS PER SCHEDULE, U.N.O.
D. RETAINING WALL SHALL NOT BE USED IN A STACKED CONFIGURATION OR AS A FLOOD WALL OR OTHERWISE SURCHARGED UNLESS SPECIFICALLY NOTED. SEE G.S.N. FOR CLARIFICATION

② #5 TRANS AT 48" o.c.
③ (1) #5 CONT.
④ #5 CONT AT 16" o.c.
⑤ NATURAL GRADE OR COMPACTED SUBGRADE
⑥ 2" PVC PIPE AT 4'-0" o.c. FOR WEEPERS
⑦ BACKFILL PER G.S.N.
⑨ STANDARD HOOK INTO FOOTING
⑩ MIN. EMBEDMENT PER SITE PLAN NOTES
⑪ (2) #5 CONT.
⑬ HOOK END OF TRANS. TOP BAR BENEATH WALL AS SHOWN BELOW

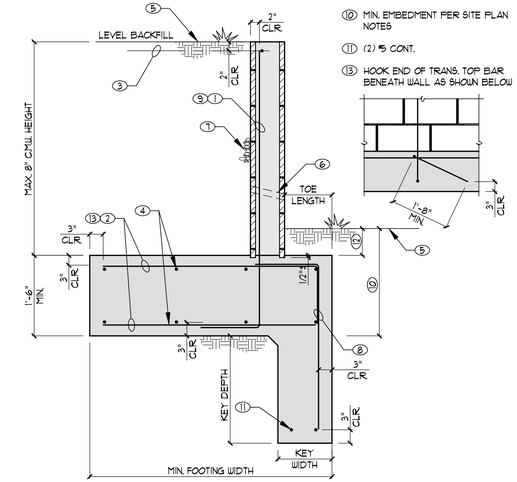

123 RETAINING WALL (KEY AT TOE)

123-220376 NO SCALE

REGISTERED PROFESSIONAL ENGINEER
ROBERT J. MCCARTHY
No. 2490
Exp. 3/31/25
GEOTECHNICAL
STATE OF CALIFORNIA
Signed 10/25/2023

REVIEW IS SUBJECT TO THE LIMITATIONS STATED IN THE REPORT DATED 5-5-2022, FILE NO: 8677-10
REPORT NO: R1-8677
R MCCARTHY CONSULTING, INC.

WRIGHT STRUCTURAL ENGINEERS
ENGINEERED IN THE USA
2 Venture, Suite 200
Irvine, CA 92618
(949) 486-1777
CA@wrightengineers.com
wrightengineers.com
Las Vegas | Orange County | Phoenix | Salt Lake City | Dallas

LICENSED PROFESSIONAL ENGINEER ALLEN CALIFORNIA No.S35460 STRUCTURAL 9/21/2023

HELIOTROPE DUPLEX
407 Heliotrope Ave.
Corona Del Mar, CA 92625

COPYRIGHT (C) WRIGHT ENGINEERS. USE OF THIS DRAWING AND ANY REPRODUCTIONS SHALL BE RESTRICTED TO THE ORIGINAL SITE FOR WHICH IT WAS PREPARED. REPRODUCTION OR RE-USE OF THIS DRAWING FOR ANY OTHER PURPOSE IS STRICTLY PROHIBITED.

NUMBER	DATE	DESCRIPTION
1	09-21-2023	PLAN CHECK REVISIONS

DATE: May 25, 2023
DESIGN BY: RO
PROJECT MGR: RO
PROJECT NO: 220376

FOUNDATION DETAILS

S33-220376-D

S3.3

① #5 AT 8" o.c. VERT.

② #5 TRANS AT 16" o.c.

③ (1) #5 CONT.

④ #5 CONT AT 16" o.c.

⑤ FLATWORK BY OTHERS

⑥ MIN. EMBEDMENT PER SITE PLAN NOTES

⑦ (E) RETAINING WALL AT ADJACENT PROPERTY

⑨ STANDARD HOOK INTO FOOTING

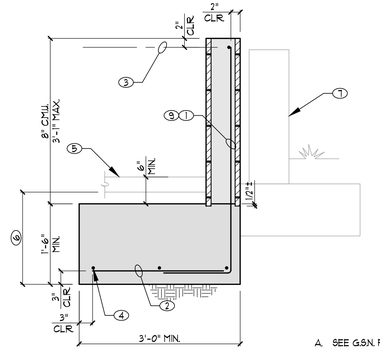

A. SEE G.S.N. FOR ADDITIONAL REQUIREMENTS AND ITEMS SHOWN BUT NOT NOTED

B. GROUT WALL SOLID

C. ALL REBAR LAP LENGTHS PER SCHEDULE, U.N.O.

D. RETAINING WALL SHALL NOT BE USED IN A STACKED CONFIGURATION OR AS A FLOOD WALL OR OTHERWISE SURCHARGED UNLESS SPECIFICALLY NOTED. SEE G.S.N. FOR CLARIFICATION

E. CONTRACTOR TO SHORE AND SUPPORT (E) RETAINING WALLS

127 RETAINING WALL ADJACENT TO (E) RETAINING WALL

127-220376

NO SCALE

DETAIL NAME	MAX. TALL 8" C.M.U. HEIGHT	MAX. SHORT 8" C.M.U. HEIGHT	MIN. FOOTING WIDTH	① VERT. BARS AT 8" C.M.U.	⑧ KEY REINFORCING	KEY WIDTH	KEY DEPTH	⑫ MAX. HEIGHT OF ADJACENT GRADE	② TRANS BARS
A	4'-9"	3'-0"	9'-6"	#5 AT 8" o.c.	#5 AT 32" o.c.	2'-4"	3'-0"	5'-8"	#5 AT 32" o.c.
B	4'-9"	1'-1"	5'-8"	#5 AT 24" o.c.	#5 AT 48" o.c.	1'-0"	1'-6"	4'-0"	#5 AT 48" o.c.
C	4'-0"	4'-0"	9'-0"	#5 AT 8" o.c.	#5 AT 32" o.c.	3'-0"	1'-0"	5'-11"	#5 AT 32" o.c.

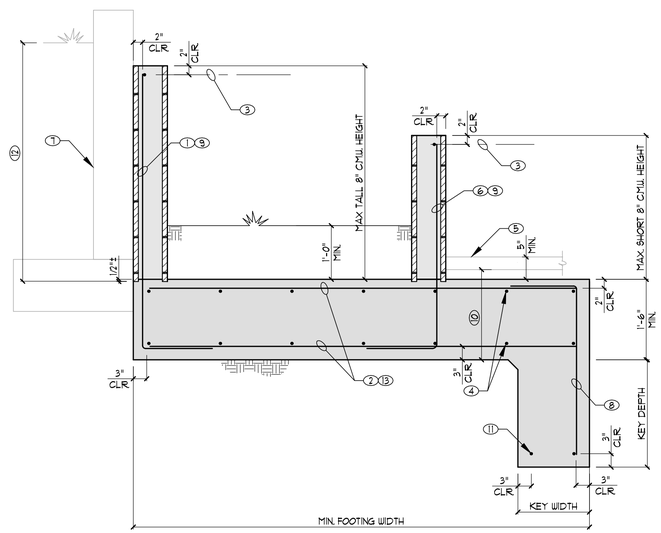

③ (1) #5 CONT.

④ #5 CONT AT 16" o.c.

⑤ FLATWORK BY OTHERS

⑥ #5 VERT. AT 16" o.c.

⑦ (E) RETAINING WALL AT ADJACENT PROPERTY

⑨ STANDARD HOOK INTO FOOTING

⑩ MIN. EMBEDMENT PER SITE PLAN NOTES

⑪ (2) #5 CONT.

⑬ HOOK END OF TRANS. TOP BAR BENEATH WALL AS SHOWN BELOW

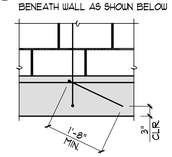

A. SEE G.S.N. FOR ADDITIONAL REQUIREMENTS AND ITEMS SHOWN BUT NOT NOTED

B. GROUT WALL SOLID

C. ALL REBAR LAP LENGTHS PER SCHEDULE, U.N.O.

D. RETAINING WALL SHALL NOT BE USED IN A STACKED CONFIGURATION OR AS A FLOOD WALL OR OTHERWISE SURCHARGED UNLESS SPECIFICALLY NOTED. SEE G.S.N. FOR CLARIFICATION

E. CONTRACTOR TO SHORE AND SUPPORT (E) RETAINING WALLS

REGISTERED PROFESSIONAL ENGINEER ROBERT J. MCCARTHY No. 2490 Exp. 3/31/25 GEOTECHNICAL STATE OF CALIFORNIA

Signed 10/25/2023

REVIEW IS SUBJECT TO THE LIMITATIONS STATED IN THE REPORT DATED 5-5-2022, FILE NO: 8677-10 REPORT NO: R1-8677 R MCCARTHY CONSULTING, INC.

128 DOUBLE RETAINING WALL ADJACENT TO (E) RETAINING WALL

128-220376

NO SCALE

WRIGHT STRUCTURAL ENGINEERS
ENGINEERED IN THE USA
2 Venture, Suite 200
Irvine, CA 92618
(949) 474-1001
CA@wrightengineers.com
wrightengineers.com
Las Vegas | Orange County | Phoenix | Salt Lake City | Dallas

LICENSED ENGINEER ALLEN STRUCTURAL ENGINEER STATE OF CALIFORNIA No.S54460 9/21/2023

HELIOTROPE DUPLEX
407 Heliotrope Ave.
Corona Del Mar, CA 92625

COPYRIGHT (C) WRIGHT ENGINEERS. USE OF THIS DRAWING AND ANY REPRODUCTIONS SHALL BE RESTRICTED TO THE ORIGINAL SITE FOR WHICH IT WAS PREPARED. REPRODUCTION OR RE-USE OF THIS DRAWING FOR ANY OTHER PURPOSE IS STRICTLY PROHIBITED.

NUMBER	DATE	DESCRIPTION
1	09-21-2023	PLAN CHECK REVISIONS

DATE: May 25, 2023
DESIGN BY: RO
PROJECT MGR: RO
PROJECT NO: 220376

FOUNDATION DETAILS

S3.4

S34-220376-D

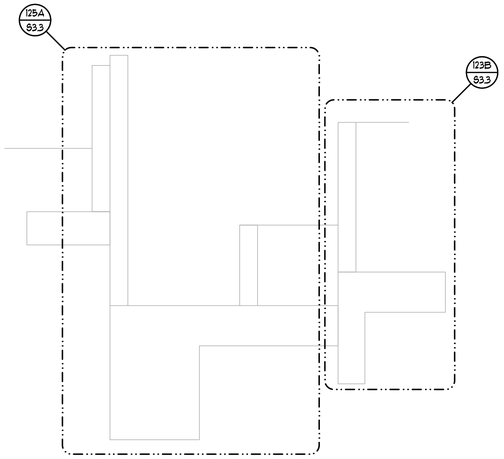

4 WALL SECTION
SCALE: N/A

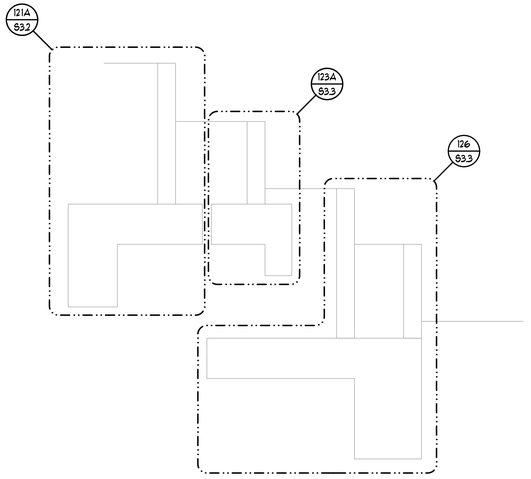

1 WALL SECTION
SCALE: N/A

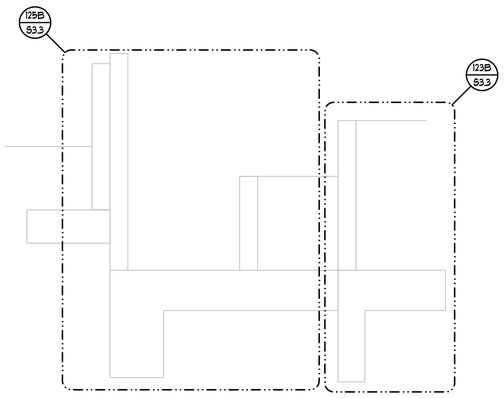

5 WALL SECTION
SCALE: N/A

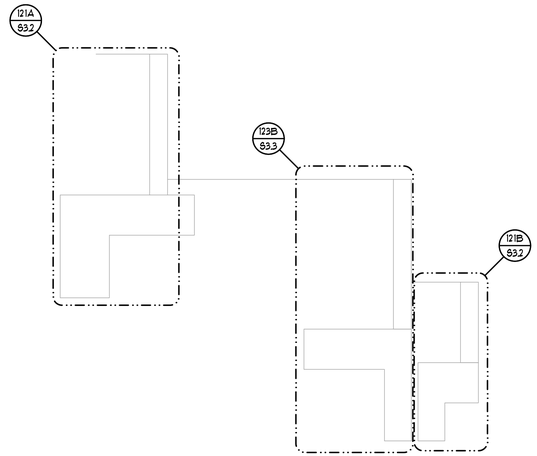

2 WALL SECTION
SCALE: N/A

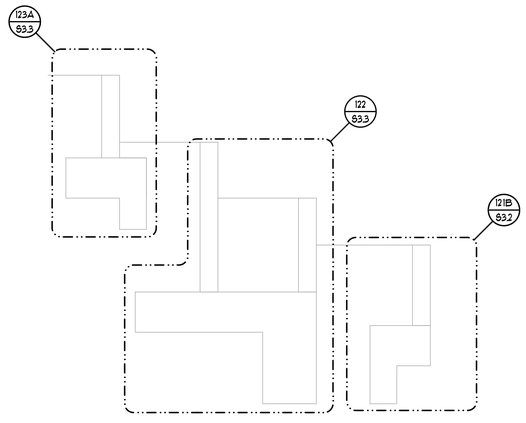

3 WALL SECTION
SCALE: N/A

WRIGHT
STRUCTURAL ENGINEERS
ENGINEERED IN THE USA
2 Venture, Suite 200
Irvine, CA 92618
(949) 857-4001
CA@wrightengineers.com
wrightengineers.com
Las Vegas | Orange County | Phoenix | Salt Lake City | Dallas

LICENSED STRUCTURAL ENGINEER
ALLEN
No.S54460
STATE OF CALIFORNIA
9/21/2023

HELIOTROPE DUPLEX
407 Heliotrope Ave.
Corona Del Mar, CA 92625

COPYRIGHT (C) WRIGHT ENGINEERS. USE OF THIS DRAWING AND ANY REPRODUCTIONS SHALL BE RESTRICTED TO THE ORIGINAL SITE FOR WHICH IT WAS PREPARED. REPRODUCTION OR RE-USE OF THIS DRAWING FOR ANY OTHER PURPOSE IS STRICTLY PROHIBITED.

NUMBER	DATE	DESCRIPTION
1	09-21-2023	PLAN CHECK REVISIONS

DATE: May 25, 2023
DESIGN BY: RO
PROJECT MGR: RO
PROJECT NO: 220376

FOUNDATION SECTIONS

S3.5

S3S-220376-SEC

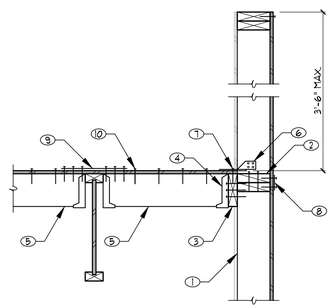

1. CONTINUOUS STUD TO TOP OF PARAPET
2. DOUBLE 2x6 FLAT BLOCKING FACE NAILED w/ (4) 16d NAILS STAGGERED
3. CONT. 2x6 LEDGER w/ (2) 16d AT EACH STUD AND (2) 16d PER BLOCK
4. SIMPSON JB TYPE HANGER
5. 2x6 BLOCKING AT 32" o.c. TO ALIGN w/ WALL STUDS
6. SIMPSON H2.5A TIE AT EA. BLOCK
7. BOUNDARY FASTENERS
8. CONT. CMST12 STRAP w/ (2) ROWS OF 10d AT 1" o.c. STAGGERED
9. CS20 STRAP x 17" CENTERED ON JOIST w/ (7) 10d TO BLOCK EACH SIDE OF JOIST
10. EDGE FASTENERS

210 WOOD LEDGER AT PARAPET STUDS

210-220376 NO SCALE

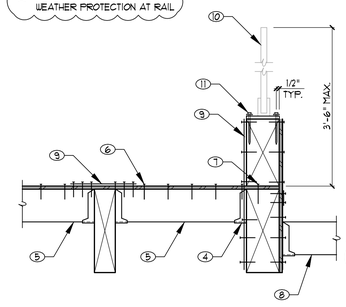

A. REFER TO ARCH'L FOR PLATE WEATHER PROTECTION AT RAIL

1. 2x6 STUD AT 12" o.c.
2. 3/8" SHEATHING w/ 8d AT 12" o.c. FIELD AND 6" o.c. EDGE
3. SIMPSON LSTA30 STRAP, EA. SIDE OF STUD AT EA. STUD
4. SIMPSON JB TYPE HANGER, TYP.
5. 2x6 BLOCKING AT 32" o.c.
6. EDGE FASTENERS
7. BOUNDARY FASTENERS
8. TRELLIS BEAM AND HANGER PER PLANS
9. CS20 STRAP x 17" CENTERED ON JOIST w/ (7) 10d TO BLOCK EACH SIDE OF JOIST
10. GLASS GUARDRAIL AND ATTACHMENT BY OTHERS
11. CONT. 1/4" THICK, 3 1/2" WIDE PLATE w/ (2) 5/16" DIA. LAG SCREWS w/ 6" EMBEDMENT AT 6" o.c.
12. CONT. BLOCK ABOVE HEADER

211 WOOD BEAM AT PARAPET STUDS

211-220376 NO SCALE

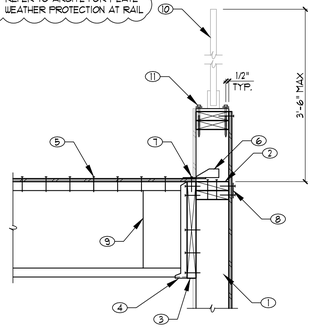

A. REFER TO ARCH'L FOR PLATE WEATHER PROTECTION AT RAIL

1. CONTINUOUS STUD TO TOP OF PARAPET
2. DOUBLE 2x6 FLAT BLOCKING FACE NAILED w/ (4) 16d NAILS STAGGERED
3. CONT. 1 3/4" LSL LEDGER w/ (5) 16d AT EA. STUD AND (2) 16d PER BLOCK
4. HANGER PER G.S.N.
5. EDGE FASTENERS
6. SIMPSON H2.5A TIE EA. JOIST
7. BOUNDARY FASTENERS
8. CONT. CMST12 STRAP w/ (2) ROWS OF 10d AT 1" o.c. STAGGERED
9. WEB STIFFENER WHERE SPECIFIED ON PLAN
10. GLASS GUARDRAIL AND ATTACHMENT BY OTHERS
11. CONT. 1/4" THICK, 3 1/2" WIDE PLATE w/ (2) 5/16" DIA. LAG SCREWS w/ 6" EMBEDMENT AT 6" o.c.

212 WOOD LEDGER AT PARAPET STUDS

212-220376 NO SCALE

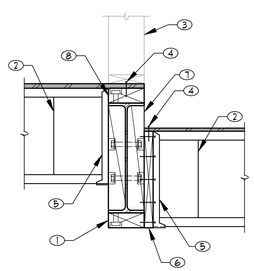

1. 3x NAILER BOLTED TO BEAM w/ 3/4" DIA. x 2 1/2" THREADED NELSON STUDS STAGGERED AT 48" o.c.
2. WEB STIFFENER WHERE SPECIFIED ON PLAN
3. FRAMING ABOVE, AS OCCURS
4. BOUNDARY FASTENERS
5. HANGER PER G.S.N.
6. CONT. 1 3/4" LSL RIM w/ (5) 1/4x4 1/2 SDS SCREWS AT 16" o.c.
7. CONT. FILLER BLOCK EA. SIDE OF STEEL BEAM w/ (2) 3/4" DIA. x 2 1/2" WELDED STUDS AT 24" o.c. - STAGGERED
8. 4x NAILER BOLTED TO BEAM w/ 3/4" DIA. x 3 1/2" THREADED NELSON STUDS STAGGERED AT 24" o.c.

213 I-JOIST AT STEEL BEAM

213-220376 NO SCALE

A. STRAPS AND SHEATHING ABOVE AND BELOW OPENING MAY BE OFFSET 1 1/2" FROM EDGE OF OPENING

B. FOR MULTIPLE OPENINGS IN SHEAR WALL, EXTEND STRAP PER (4) CONT. OVER ALL OPENINGS

5. HOLD SHEATHING BACK ON FIRST KING STUD OR POST FOR EDGE NAILING OF ADJOINING PANELS TO SAME MEMBER
6. HEADER PER PLAN

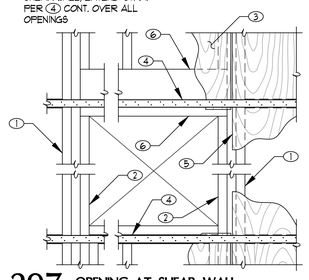

1. (2) KING STUDS U.N.O. ON PLAN OR SHEAR WALL SCHEDULE. EDGE NAIL PLYWOOD SHEATHING FULL HEIGHT
2. TRIMMER STUD(S) PER PLAN
3. SHEATHING AND NAILING ABOVE AND BELOW OPENING TO MATCH SHEAR WALL PER PLAN. EDGE NAIL PANELS ABOVE AND BELOW OPENING TO KING STUD
4. CS16 U.N.O. INSTALL STRAP(S) ON TOP OF SHEATHING FULL LENGTH OF WALL. STRAP NAILS MAY COUNT AS SHEATHING EDGE NAILS. PROVIDE 4x BLOCKING AND FILL ALL STRAP NAIL HOLES EXCEPT AS NOTED IN TABLE BELOW OR ON PLAN

STRAP	NAILING	BLOCKING
CS16 AND SMALLER	(2) 8d AT 4 1/8" o.c.	2x
CS14	(2) 10d AT 4 1/8" o.c.	2x
(2) CS16	(2) 8d AT 4 1/8" o.c. EACH STRAP	4x
CMSTC16	(2) 16d AT 3" o.c. FOR SW9 - SW15	4x

207 OPENING AT SHEAR WALL

WA01-04 070924 NO SCALE

1. TOP PLATE STEP PER ARCH'L
2. 4x BLOCKING TO ACCEPT STRAP NAILS, U.N.O., LENGTH PER PLAN
3. SHEATHE FROM HIGH TOP PLATE TO BLOCKING w/ 3/8" PLYWOOD w/ 8d AT 3" o.c. EDGES AND 12" o.c. FIELD, OR MATCH SHEARWALL SHEATHING AND NAILING, WHICHEVER IS MORE STRINGENT. SHEATHING TO EXTEND ENTIRE LENGTH OF BLOCKING
4. (2) CONT. CS16 w/ (2) 8d AT 4 1/8" o.c. U.N.O. ON PLAN
5. END LENGTH AND FASTENERS PER STRAP MFR. TO DEVELOP FULL STRAP CAPACITY

A. ROOF FRAMING MEMBERS NOT SHOWN FOR CLARITY

208 STEP AT TOP PLATE

239-202271 NO SCALE

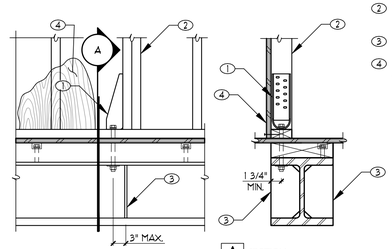

A SECTION

1. HOLDOWN PER PLAN w/ THRU-BOLT DIA. PER MFR. SPECS.
2. SHEAR WALL END STUDS PER PLAN OR SCHEDULE
3. 1/2" STIFFENER
4. SHEAR WALL PER PLAN AS OCCURS

209 HOLDOWN AT STEEL BEAM

WB03-10 180907 NO SCALE

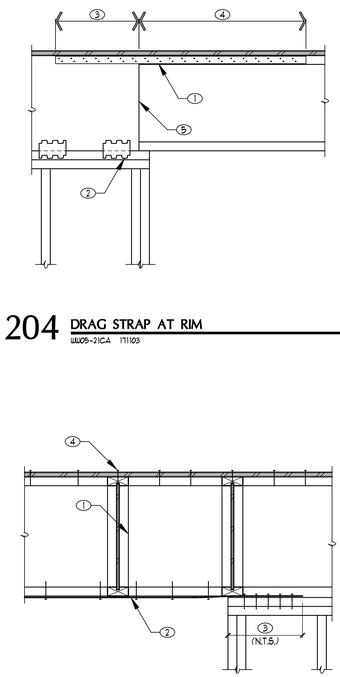

A AT WALL

1. BLOCKING PER TABLE BELOW. LENGTH PER PLAN

STRAP TYPE	BLOCKING TYPE
CS16	I-JOIST
CS14	I-JOIST
(2) CS16	TJI360 OR 3 1/2" LVL/LSL
(2) CS14	TJI360 OR 3 1/2" LEVL/LSL
CMSTC16	3 1/2" LVL/LSL
CMST14	3 1/2" LVL/LSL
CMST12	3 1/2" LVL/LSL

2. STRAP PER PLAN OR NOTE "A" BELOW CONTINUE STRAP AND BLOCKING BEYOND END OF WALL AS SHOWN ON PLAN
3. END LENGTH AND FASTENERS PER STRAP MFR. TO DEVELOP FULL STRAP CAPACITY
4. BOUNDARY FASTENERS. PROVIDE (2) ROWS OF BOUNDARY FASTENERS AT INTERIOR WALL w/ SHEAR WALL IN WALL LINE
5. HANGER PER PLAN OR G5N

204 DRAG STRAP AT RIM

WW05-21CA 171103 NO SCALE

B AT JOIST/BEAM

A. WHERE NO STRAP NOTED ON PLAN, USE (1) CS16

B. AT OPTION B, STRAP MAY BE INSTALLED ON EITHER TOP OR BOTTOM CHORD OF I-JOIST.

205 DRAG STRAP AT END OF WALL

WW05-10CA 070911 NO SCALE

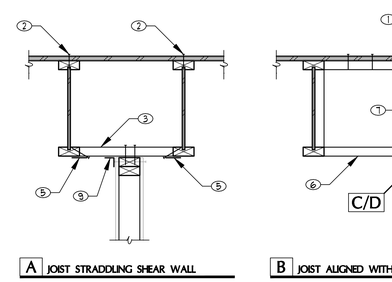

A JOIST STRADDLING SHEAR WALL

B JOIST ALIGNED WITH SHEAR WALL

C AT LVL/LSL

D AT OFFSET LVL/LSL

1. (2) ROWS OF BOUNDARY FASTENERS
2. (1) ROW OF BOUNDARY FASTENERS
3. 2x6 LADDER BLOCKING AT 24" o.c. OR MATCH CLIP SPACING PER PLAN. NAIL TO WALL TOP PLATE w/ (3) 16d
4. LTP4 CLIP WHERE NOTED ON PLAN
5. LTP4 CLIP AT SPACING TO MATCH KEYNOTE (3), U.N.O. ON PLAN
6. I-JOIST BLOCKING EACH SIDE OF JOIST/LVL AT 48" o.c.
7. (2) 16d
8. 16d AT 8" o.c., U.N.O.
9. A35 AT SPACING TO MATCH LTP4 CLIP SPACING WHERE NOTED ON PLAN
9. A35 AT 24" o.c. MAX., U.N.O. ON PLAN

A. OPTIONS A, B, C OR D MAY BE USED AT CONTRACTOR'S OPTION UNLESS ONE OPTION IS SPECIFICALLY CALLED FOR ON PLAN.

206 DRAG JOIST AT SHEAR WALL

WW05-02CA 070930 NO SCALE

SHEAR WALL ABOVE	CLIP SPACING
SW9	LTP4 AT 30"
SW11	LTP4 AT 22"
SW13	LTP4 AT 16"
SW15, SW16	LTP4 AT 12"
SW17	LTP4 AT 10"
SW18, SW19	LTP4 AT 8"
SW20	LTP4 AT 10" EACH SIDE

A. L5L RIM MAY BE REPLACED w/ CROSS LAMINATED LVL RIM OF THE SAME DEPTH AND THICKNESS

B. THE "ALTERNATE UPPER STORY RIM AND SHEAR WALL ATTACHMENT" DETAIL MAY BE USED IN LIEU OF THIS DETAIL AT APPROPRIATE SHEAR WALL LOCATIONS.

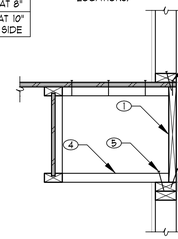

A SECTION

1. 1 1/4" LSL (EXCEPT WHERE SHEAR WALL LOCATED ABOVE) TO MATCH JOIST DEPTH. USE 1 1/2" MIN. L5L WHERE SHEAR WALLS SW9 THRU SW13 LOCATED DIRECTLY ABOVE. USE 3 1/2" MIN. L5L WHERE SHEAR WALLS SW15, SW16, SW17, SW18, SW19 AND SW20 LOCATED DIRECTLY ABOVE. MINIMUM LENGTH OF 3 1/2" MIN. L5L TO MATCH SHEAR WALL LENGTH ABOVE
2. BOUNDARY FASTENERS
3. LTP4 AT 32" o.c. MAX. WHERE SHEAR WALL IS LOCATED DIRECTLY ABOVE PROVIDE CLIPS PER TABLE
4. I-JOIST BLOCKING AT 48" o.c.
5. (2) 16d INTO TOP PLATE
6. 16d AT 12" o.c. RIM TO TOP PLATE

201 RIM JOIST AT STUD WALL

WW05-01CA 171103 NO SCALE

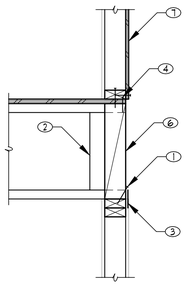

B SECTION

1. 16d AT 12" o.c. RIM TO TOP PLATE
2. WEB STIFFENER WHERE SPECIFIED ON PLAN
3. LTP4 AT 32" o.c. MAX. WHERE SHEAR WALL IS LOCATED ABOVE, PROVIDE CLIPS PER TABLE BELOW

SHEAR WALL ABOVE	CLIP SPACING
SW9	LTP4 AT 30"
SW11	LTP4 AT 22"
SW13	LTP4 AT 16"
SW15, SW16	LTP4 AT 12"
SW17	LTP4 AT 10"
SW18, SW19	LTP4 AT 8"
SW20	LTP4 AT 10" EACH SIDE

4. BOUNDARY FASTENERS
5. 1 1/4" LSL (EXCEPT WHERE SHEAR WALL LOCATED ABOVE) TO MATCH JOIST DEPTH. USE 1 1/2" MIN. L5L WHERE SHEAR WALLS SW9 THRU SW13 LOCATED DIRECTLY ABOVE. MINIMUM LENGTH OF 1 1/2" MIN. L5L TO MATCH SHEAR WALL LENGTH ABOVE
6. 3 1/2" MIN. L5L BLOCKING TO MATCH I-JOIST DEPTH. ONLY REQUIRED DIRECTLY UNDER SHEAR WALL SW15, SW16, SW17, SW18, SW19 AND SW20.
7. SHEAR WALL PER PLAN

A. L5L BLOCKING AND RIM MAY BE REPLACED w/ CROSS LAMINATED LVL BLOCKING AND RIM OF THE SAME DEPTH AND THICKNESS.

B. THE "ALTERNATE UPPER STORY RIM AND SHEAR WALL ATTACHMENT" DETAIL MAY BE USED IN LIEU OF THIS DETAIL AT APPROPRIATE SHEAR WALL LOCATIONS.

202 RIM JOIST AT STUD WALL

WW05-05CA 171103 NO SCALE

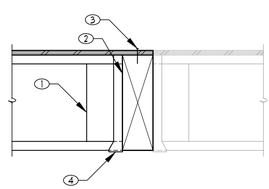

1. WEB STIFFENER WHERE SPECIFIED ON PLAN
2. JOIST TO FIT SNUG AGAINST FACE OF BEAM
3. BOUNDARY FASTENERS. PROVIDE (2) ROWS OF BOUNDARY FASTENERS AT BEAM IN LINE w/ SHEAR WALL
4. HANGER PER G5N

203 WOOD I-JOIST AT WOOD BEAM

WW05-03CA 070911 NO SCALE

WRIGHT STRUCTURAL ENGINEERS
ENGINEERED IN THE USA
2 Venture, Suite 200
Irvine, CA 92618
(949) 727-4003
DA@wrightengineers.com
wrightengineers.com
Las Vegas | Orange County | Phoenix | Salt Lake City | Dallas

HELIOTROPE DUPLEX
407 Heliotrope Ave.
Corona Del Mar, CA 92625

COPYRIGHT (C) WRIGHT ENGINEERS. USE OF THIS DRAWING AND ANY REPRODUCTIONS SHALL BE RESTRICTED TO THE ORIGINAL SITE FOR WHICH IT WAS PREPARED. REPRODUCTION OR RE-USE OF THIS DRAWING FOR ANY OTHER PURPOSE IS STRICTLY PROHIBITED.

NUMBER	DATE	DESCRIPTION
1	09-21-2023	PLAN CHECK REVISIONS

DATE: May 25, 2023
DESIGN BY: RO
PROJECT MGR: RO
PROJECT NO: 220376

FLOOR FRAMING DETAILS

S41-220376-D

S4.1

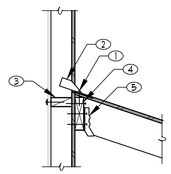

1. BOUNDARY FASTENERS
2. SIMPSON H2.5A CLIP EA. STUD
3. 2x BLOCKING w/ CONT. CS16 STRAP w/ 8d AT 4 1/8" o.c.
4. 2x LEDGER TO MATCH RAFTER DEPTH w/ (3) 16d EA. STUD AND 16d AT 8" o.c. EA. BLOCK
5. HANGER PER PLANS

223 ROOF RAFTER AT FULL-HEIGHT STUD WALL

223-220376 NO SCALE

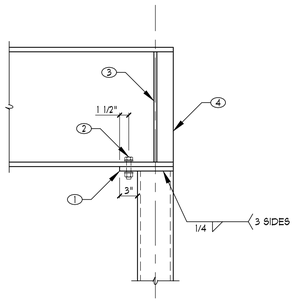

1. 3/4" CAP PLATE
2. (2) 3/4" DIA. BOLTS ON BEAM GAGE
3. 3/8" (AT W21 BEAMS AND SMALLER) OR 1/2" (AT W24 BEAMS AND LARGER) STIFFENER, TYP. BOTH SIDES OF BEAM WEB U.N.O.
4. END OF BEAM TO BE FLUSH w/ FACE OF COLUMN

A. ADJOINING FRAMING AS OCCURS NOT SHOWN FOR CLARITY

224 STEEL BEAM AT STEEL COLUMN

S606-01A 080303 NO SCALE

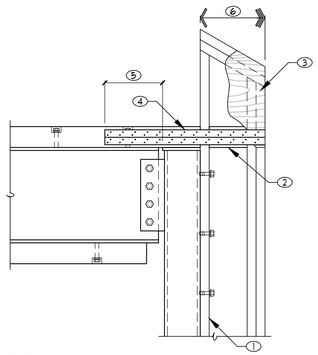

1. NAILER AT STEEL COLUMN PER TYPICAL DETAIL
2. SOLID 4x BLOCK TO RECEIVE STRAPS
3. SHEAR WALL SHEATHING PER PLANS
4. (2) SIMPSON CS14 STRAPS
5. 16" MIN. END EXTENSION w/ (30) 8d EA. STRAP
6. 8d STRAP NAILING ((2) 8d AT 4 1/8" o.c. MAX.). EXTEND STRAPS AND BLOCKING TO END OF SHEAR WALL

A. SEE DETAIL 227/S4.3 FOR ITEMS SHOWN BUT NOT NOTED

225 STEEL BEAM AT STEEL COLUMN

225-220376 NO SCALE

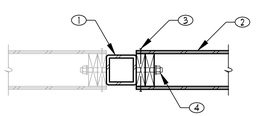

1. STEEL COLUMN PER PLAN
2. SHEAR WALL PER PLAN
3. EDGE NAILING
4. 3/4" THREADED WELDED STUD AT 32" o.c. L = 4" MIN. AT (2) 2x STUDS, 4 1/2" MIN. AT 4x POST, 6 1/2" MIN. AT 6x POST

226 WOOD SHEAR WALL AT STEEL COLUMN – PLAN VIEW

W503-08 070911 NO SCALE

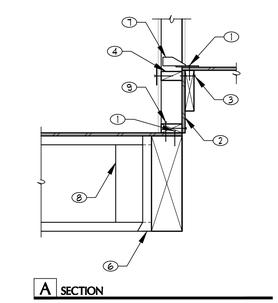

A SECTION

1. BOUNDARY FASTENERS
2. MIN. 3/8" PLYWOOD w/ 8d AT 6" o.c.
3. 16d AT 8" o.c. EA. BLOCK
4. 2x BLOCKING w/ CONT. CS16 STRAP w/ (2) 8d AT 4 1/8" o.c.
5. 2x LEDGER TO MATCH RAFTER DEPTH w/ (3) 16d EA. STUD AND 16d AT 8" o.c. TO BLOCK
6. HANGER PER G5N
7. SIMPSON H2.5A CLIP AT 32" o.c.
8. WEB STIFFENER WHERE SPECIFIED ON PLAN
9. 16d AT 16" o.c. U.N.O. ON SHEARWALL SCHEDULE

221 LOW ROOF RAFTER AT BEAM

221-220376 NO SCALE

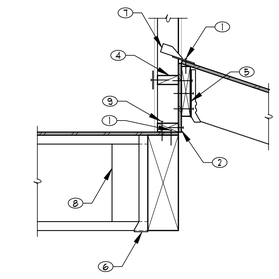

B SECTION

A. WHERE JOISTS ARE PARALLEL TO BEAM, INSTALL I-JOIST BLOCKING AT 48" o.c. BETWEEN BEAM AND FIRST JOIST

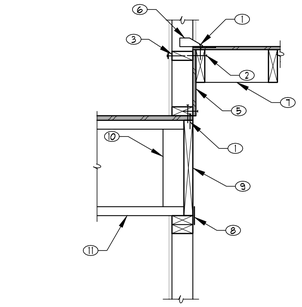

A

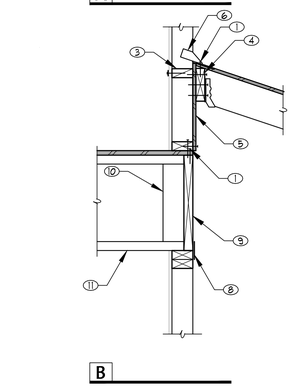

B

1. BOUNDARY FASTENERS
2. 16d AT 8" o.c. EA. BLOCK
3. 2x BLOCKING w/ CONT. CS16 STRAP w/ 8d AT 4 1/8" o.c.
4. 2x LEDGER TO MATCH RAFTER DEPTH w/ (3) 16d EA. STUD AND 16d AT 8" o.c. EA. BLOCK
5. 3/8" PLYWOOD (MIN.) w/ 8d AT 6" o.c. OR CONTINUATION OF SHEAR WALL AS OCCURS
6. SIMPSON H2.5A CLIP AT 32" o.c.
7. 2x BLOCKING AT 48" o.c.
8. LTP4 OR A35 AT 32" o.c. MAX. PROVIDE CLIPS PER TABLE BELOW. DIRECTLY BELOW SHEAR WALL AS OCCURS

SHEAR WALL ABOVE	CLIP SPACING
SW9	LTP4/A35 AT 30"
SW11	LTP4/A35 AT 22"
SW13	LTP4/A35 AT 16"
SW15, SW16	LTP4/A35 AT 12"
SW17	LTP4/A35 AT 10"
SW18	LTP4/A35 AT 8"

9. RIM PER RIM JOIST AT STUD WALL DETAIL
10. WEB STIFFENER AS REQ'D BY JOIST MFR
11. WOOD I-JOIST SPACED PER PLAN OR I-JOIST BLOCKING AT 48" o.c.

A. THE "ALTERNATE UPPER STORY RIM AND SHEAR WALL ATTACHMENT" MAY BE USED AS APPROPRIATE

222 LOW ROOF RAFTER AT STUD WALL

222-220376 NO SCALE

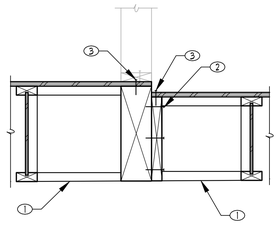

1. I-JOIST BLOCKING AT 48" o.c.
2. 1 3/4" LSL LEDGER TO MATCH JOIST DEPTH w/ (3) 1/4x4 1/2 SDS SCREWS AT 16" o.c.
3. BOUNDARY FASTENERS, PROVIDE (2) ROWS OF BOUNDARY FASTENERS AT BEAM IN LINE w/ SHEAR WALL

218 WOOD I-JOIST AT WOOD BEAM

223-202171 NO SCALE

SHEAR WALL ABOVE	CLIP SPACING
SW9	LTP4 AT 30"
SW11	LTP4 AT 22"
SW13	LTP4 AT 16"
SW15, SW16	LTP4 AT 12"
SW17	LTP4 AT 10"
SW18, SW19	LTP4 AT 8"
SW20	LTP4 AT 10" EACH SIDE

A. LSL RIM MAY BE REPLACED w/ CROSS LAMINATED LVL RIM OF THE SAME DEPTH AND THICKNESS

B. THE "ALTERNATE UPPER STORY RIM AND SHEAR WALL ATTACHMENT" DETAIL MAY BE USED IN LIEU OF THIS DETAIL AT APPROPRIATE SHEAR WALL LOCATIONS.

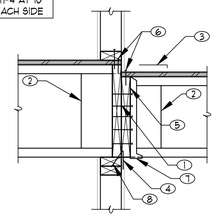

1. 1 1/4" LSL (EXCEPT WHERE SHEAR WALL LOCATED ABOVE) TO MATCH JOIST DEPTH. USE 1 1/2" MIN. LSL WHERE SHEAR WALLS SW9 THRU SW13 LOCATED DIRECTLY ABOVE. USE 3 1/2" MIN. LSL WHERE SHEAR WALLS SW15, SW16, SW17, SW18, SW19 AND SW20 LOCATED DIRECTLY ABOVE. MINIMUM LENGTH OF 3 1/2" MIN. LSL TO MATCH SHEAR WALL LENGTH ABOVE
2. WEB STIFFENER WHERE SPECIFIED ON PLAN
3. STEP PER ARCH'L
4. LTP4 AT 32" o.c. MAX. WHERE SHEAR WALL IS LOCATED DIRECTLY ABOVE, PROVIDE CLIPS PER TABLE
5. 1 3/4" LSL LEDGER TO MATCH JOIST DEPTH w/ (5) 1/4x4 1/2 SDS SCREWS AT 16" o.c.
6. BOUNDARY FASTENERS
7. HANGER PER PLAN G.S.N.

219 DECK JOIST AT STUD WALL

230-220633 NO SCALE

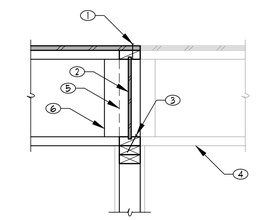

A AT I-JOIST BLOCKING

1. BOUNDARY FASTENERS, PROVIDE (2) ROWS OF BOUNDARY FASTENERS AT INTERIOR WALL w/ SHEAR WALL IN WALL LINE
2. I-JOIST BLOCKING
3. (4) 16d PER BLOCK, U.N.O. ON PLANS
4. CONTINUATION OF JOIST OR STAGGERED JOIST AS OCCURS (PER PLAN)
5. LINE OF STAGGERED JOIST BEYOND AS OCCURS
6. WEB STIFFENER WHERE SPECIFIED ON PLAN
7. LTP4 AT 18" o.c., U.N.O. ON PLANS
8. 1 1/2" MIN. LSL BLOCKING

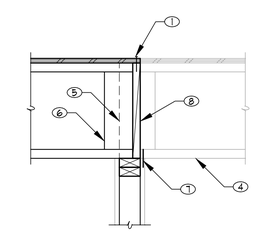

B AT LSL BLOCKING

A. LVL BLOCKING MAYBE REPLACED w/ LSL BLOCKING OF THE SAME DEPTH AND THICKNESS.

220 WOOD I-JOIST AT WOOD STUD WALL

W405-01CA 171103 NO SCALE

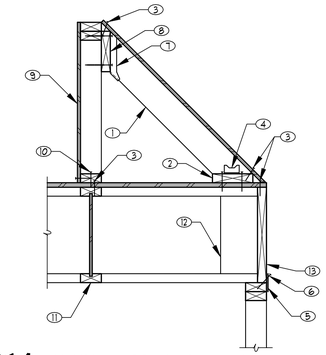

1. 2x6 RAFTER AT 24" o.c.
2. CONT. 2x8 PLATE w/ (2) 1/4x3 1/2 SDS SCREWS AT EA. JOIST
3. BOUNDARY FASTENERS
4. A34 CLIP EA. RAFTER
5. A35 AT 24" o.c.
6. 16d AT 12" o.c. RIM TO TOP PLATE
7. U-TYPE HANGER
8. CONT. 2x LEDGER w/ (2) 1/4x 4 1/2 SDS SCREWS AT EA. STUD AND (1) SCREW AT 8" o.c. TO TOP PLATE
9. 3/8" PLYWOOD w/ 8d AT 6" o.c. EDGE AND 12" o.c. FIELD
10. 1/4x3 1/2 SDS SCREWS AT 6" o.c.
11. I-JOIST BLOCKING ALIGNED UNDERNEATH WALL
12. WEB STIFFENER
13. 1 1/2" MIN. LSL RIM

214 MANSARD ROOF AT STUD WALL

214-220376 NO SCALE

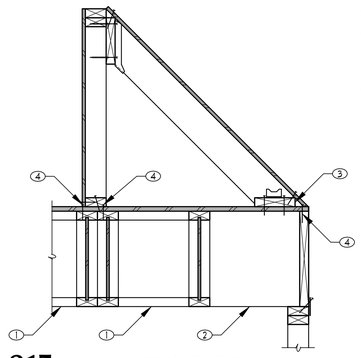

1. I-JOIST BLOCKING AT 48" o.c.
2. 2x12 BLOCKING AT 24" o.c.
3. CONT. 2x8 PLATE w/ (2) 1/4x3 1/2 SDS SCREWS AT EA. BLOCK
4. BOUNDARY FASTENERS

A. REFER TO DETAIL 214/S4.2 FOR ITEMS SHOWN BUT NOT NOTED

215 MANSARD ROOF AT STUD WALL

215-220376 NO SCALE

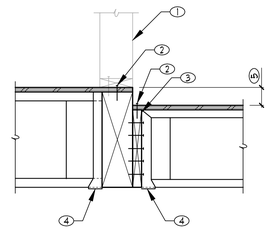

1. FRAMING ABOVE AS OCCURS
2. BOUNDARY FASTENERS
3. 1 3/4" LEDGER TO MATCH JOIST DEPTH w/ (5) 1/4x4 1/2 SDS SCREWS AT 16" o.c.
4. HANGER PER PLAN G.S.N.
5. STEP PER ARCH'L

216 WOOD I-JOIST AT WOOD BEAM

216-220376 NO SCALE

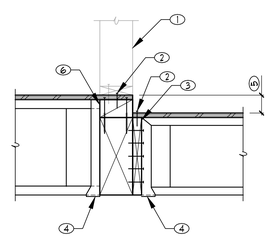

1. FRAMING ABOVE AS OCCURS
2. BOUNDARY FASTENERS
3. 1 3/4" LEDGER TO MATCH JOIST DEPTH w/ (5) 1/4x4 1/2 SDS SCREWS AT 16" o.c.
4. HANGER PER G.S.N.
5. STEP PER ARCH'L
6. CONT. SHIM BLOCK w/ (2) 1/4x4 SDS SCREWS AT 24" o.c. STAGGERED

217 WOOD I-JOIST AT WOOD BEAM

217-220376 NO SCALE

WRIGHT STRUCTURAL ENGINEERS
ENGINEERED IN THE USA
2 Venture, Suite 200
Irvine, CA 92618
(949) 727-1400
DA@wrightengineers.com
wrightengineers.com
Las Vegas | Orange County | Phoenix | Salt Lake City | Dallas

REGISTERED PROFESSIONAL ENGINEER ALLEN V. DA CUNHA No.S35460 STRUCTURAL STATE OF CALIFORNIA 9/21/2023

HELIOTROPE DUPLEX
407 Heliotrope Ave.
Corona Del Mar, CA 92625

COPYRIGHT (C) WRIGHT ENGINEERS. USE OF THIS DRAWING AND ANY REPRODUCTIONS SHALL BE RESTRICTED TO THE ORIGINAL SITE FOR WHICH IT WAS PREPARED. REPRODUCTION OR RE-USE OF THIS DRAWING FOR ANY OTHER PURPOSE IS STRICTLY PROHIBITED.

NUMBER	DATE	DESCRIPTION
1	09-21-2023	PLAN CHECK REVISIONS

DATE: May 25, 2023
DESIGN BY: RO
PROJECT MGR: RO
PROJECT NO: 220376

FLOOR FRAMING DETAILS

S42-220376-D

S4.2

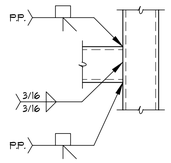

A. ADJOINING FRAMING NOT SHOWN FOR CLARITY

238 HSS BEAM AT HSS COLUMN

238-220316 NO SCALE

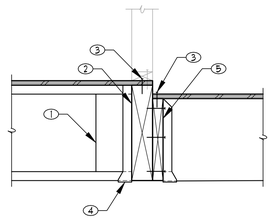

1. WEB STIFFENER AS REQ'D BY JOIST MFR
2. JOIST TO FIT SNUG AGAINST FACE OF BEAM
3. BOUNDARY FASTENERS.
4. HANGER PER GSN
5. 2x LEDGER TO MATCH JOIST DEPTH w/ (3) 1/4x3 1/2 SDS SCREWS AT 16" o.c.

239 STEP IN FLOOR DIAPHGRAM

239-220316 NO SCALE

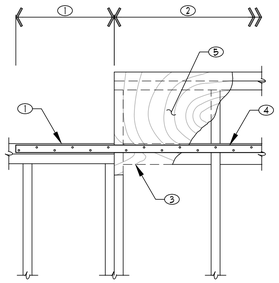

1. 16" MIN. END LENGTH w/ (22) 8d NAILS. AT 3/12 Δ, USE 33" END LENGTH w/ (74) 16d NAILS.
2. EXTEND STRAP AND BLOCKING 2'-0" MIN. AT 3/12Δ, EXTEND STRAP 8'-0" MIN.
3. 4x4 BLOCKING
4. CS14 w/ (2) 8d AT 4 1/8" o.c., U.N.O. AT 3/12Δ, USE CMST12 w/ (2) 16d AT 3 1/2" o.c.
5. SHEATHING PER PLANS. WHERE NO SHEATHING IS NOTED, USE 3/8" PLYWOOD w/ 8d AT 2" o.c. PROVIDE (2) 2x STUDS STITCH W/ 16d AT 16" o.c. AT ADJOINING PANEL EDGES

240 DRAG STRAP AT TOP PLATE SPLICE

221-220271 NO SCALE

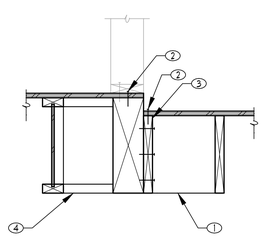

1. 2x BLOCKING AT 48" o.c.
2. BOUNDARY FASTENERS
3. 2x LEDGER TO MATCH JOIST DEPTH w/ (3) 1/4x3 1/2 SDS SCREWS AT 16" o.c.
4. I-JOIST BLOCKING AT 48" o.c.

241 STEP IN FLOOR DIAPHRAGM

241-220316 NO SCALE

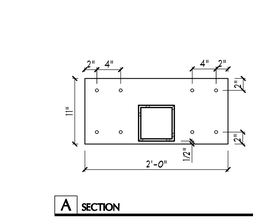

A SECTION

1. GRIND SMOOTH WHERE REQUIRED BY ARCH'L
2. STEEL STRINGER PER PLAN
3. 1" THICK x 24"x 2'-0" LONG STEEL LANDING PLATE w/ 1/2" DIA. LAG SCREWS w/ 2 1/2" MIN. EMBEDMENT INTO LANDING TOPPING AT 12" o.c. MAX
4. LANDING SURFACE BY OTHERS
5. 1/4" THICK MOUNTING PLATE w/ (8) 1/2" DIA. THRU-BOLTS

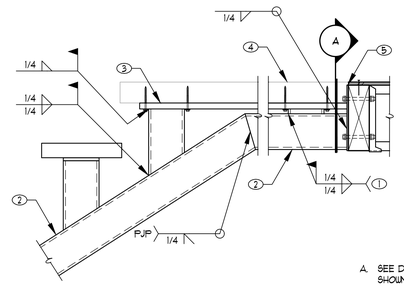

A. SEE DETAIL 236/S4.3 FOR ITEMS SHOWN BUT NOT NOTED

235 STAIR STRINGER AT LANDING

235-220316 NO SCALE

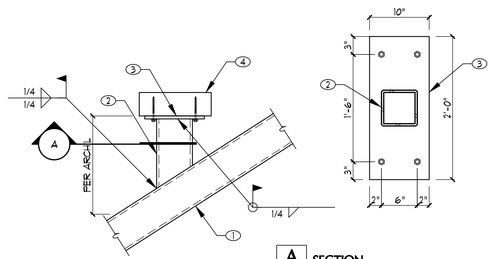

3. 1/2" THICK x 10"x 2'-0" LONG TREAD SUPPORT PLATE w/ (4) 1/2" DIA. LAG SCREWS w/ 2 1/2" MIN. EMBEDMENT INTO WOOD TREAD
4. 4x12 TREAD

1. STEEL STRINGER PER PLAN
2. HSS 6x6x1/4 STRINGER SUPPORT

A SECTION

236 TYPICAL TREAD

221-220633 NO SCALE

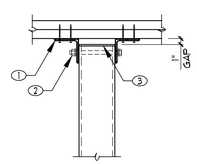

1. L4x4x1/4 EA. SIDE OF COLUMN w/ (4) 1/4x3 SDS SCREWS TO TOP PLATES EA. ANGLE
2. 3/4" DIA. THRU BOLT IN 1 1/2" VERT. SLOTTED HOLE
3. CAP PLATE PER TYPICAL DETAIL

237 TOP OF STEEL COLUMN ATTACHMENT

231-220316 NO SCALE

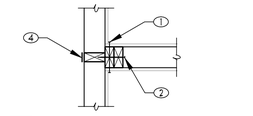

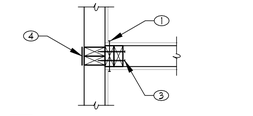

1. EDGE NAILING
2. SD51/4x4 1/2 AT 6" o.c.
3. (2) SD51/4x4 1/2 AT 6" o.c.
4. HOLDOWN STRAP PER PLAN

231 SHEAR WALL HOLDOWN STRAP

WA01-18 070830 NO SCALE

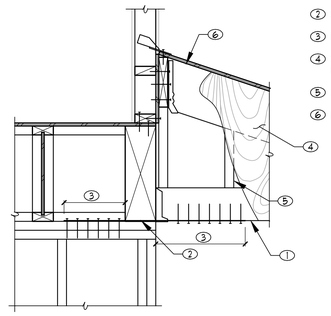

1. DOUBLE CEILING JOIST
2. SIMPSON CS14 STRAP
3. 15" MIN. w/ (26) 10d
4. 3/8" MIN. PLYWOOD w/ 8d AT 6" o.c. EDGE AND 12" o.c. FIELD
5. 2x STUDS AT 16" o.c.
6. RAFTER PER PLANS

232 DRAG CEILING JOIST

232-220316 NO SCALE

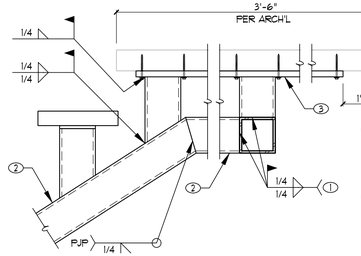

1. GRIND SMOOTH WHERE REQUIRED BY ARCH'L
2. STEEL STRINGER PER PLAN
3. 1" THICK x 24"x 2'-0" LONG STEEL LANDING PLATE w/ 1/2" DIA. LAG SCREWS w/ 2 1/2" MIN. EMBEDMENT INTO LANDING TOPPING AT 12" o.c. MAX
4. LANDING SURFACE BY OTHERS

A. SEE DETAIL 236/S4.3 FOR ITEMS SHOWN BUT NOT NOTED.

233 STAIR STRINGER AT LANDING

233-220316 NO SCALE

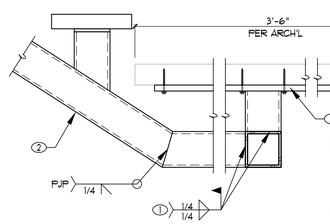

1. GRIND SMOOTH WHERE REQUIRED BY ARCH'L
2. STEEL STRINGER PER PLAN
3. 1" THICK x 24"x 2'-0" LONG STEEL LANDING PLATE w/ 1/2" DIA. LAG SCREWS w/ 2 1/2" MIN. EMBEDMENT INTO LANDING TOPPING AT 12" o.c. MAX
4. LANDING SURFACE BY OTHERS

A. SEE DETAIL 236/S4.3 FOR ITEMS SHOWN BUT NOT NOTED

234 STAIR STRINGER AT LANDING

234-220316 NO SCALE

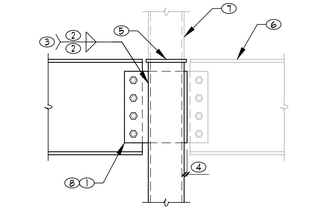

8. AT DETAIL 227Δ, USE STD. HOLES IN BOTH BEAM WEB AND SHEAR PLATE. BOLTS SHALL BE FULLY PRETENSIONED. FAYING SURFACES SHALL BE PREPARED AS REQ'D. FOR CLASS "A" SLIP-CRITICAL JOINTS (SEE G.S.N. FOR ADDITIONAL INFO.)

1. KNIFE PLATE THICKNESS, BOLTS, ETC., PER TYPICAL SHEAR PLATE CONNECTION SCHEDULE
2. WELD SIZE PER TYPICAL SHEAR PLATE CONNECTION SCHEDULE
3. TYP. BOTH SIDES OF COLUMN
4. AT ONE-SIDED CONNECTIONS, PROJECTION OF KNIFE PLATE AT FAR SIDE SHALL BE SUFFICIENT TO ACCOMMODATE WELD SIZE NOTED ABOVE
5. CAP PLATE AT TOP OF COLUMN PER TYPICAL COLUMN CAP PLATE DETAIL U.N.O.
6. BEAM BOTH SIDES OF COLUMN AS OCCURS PER PLAN
7. CONTINUATION OF COLUMN AS OCCURS

A. ADJOINING FRAMING AS OCCURS NOT SHOWN FOR CLARITY

227 STEEL BEAM AT HSS COLUMN

227-220316 NO SCALE

227A AS NOTED SLRS

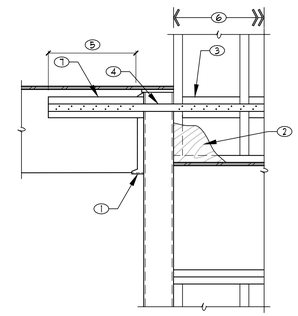

1. WELDED SIMPSON HUC HANGER w/ (6) 1" SEGMENTS, PER MFR. SPECS
2. SHEATHING PER PLANS
3. SOLID 2x BLOCK TO RECEIVE STRAP
4. SIMPSON CS14 STRAP
5. 16" MIN. END EXTENSION w/ (30) 8d
6. 8d STRAP NAILING ((2) 8d AT 4 1/8" o.c. MAX.). EXTEND STRAP AND BLOCKING TO END OF SHEAR WALL
7. 2x SCAB (AS REQ'D.) w/ (20) 16d

228 WOOD BEAM TO STEEL COLUMN

228-220316 NO SCALE

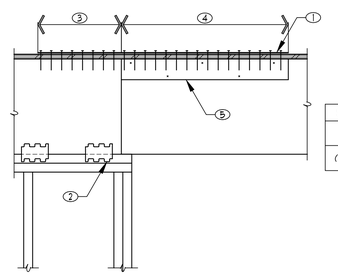

1. STRAP PER PLAN OR NOTE "A" BELOW
2. LTP4 CLIPS PER DRAG JOIST AT SHEAR WALL DETAIL
3. MIN. STRAP END LENGTH AND FASTENERS TO RIM PER TABLE
4. MIN. STRAP END LENGTH AND FASTENERS TO JOIST PER TABLE

STRAP	(2)	(3)
CS16	14" MIN. w/ (13) 8d	28" MIN. w/ (2) 8d AT 4 1/8" o.c.
(2) CS14	15" MIN. w/ (26) 10d	30" MIN. w/ (2) 10d AT 4 1/8" o.c.

5. 4x SCAB w/ (2) 1/4x5 1/2 SDS SCREWS AT 12" o.c. STAGGERED

229 DRAG STRAP AT BEAM

229-220316 NO SCALE

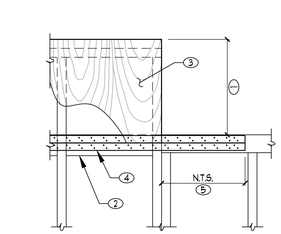

1. TOP PLATE STEP PER ARCH'L
2. 4x BLOCKING TO ACCEPT STRAP NAILS, U.N.O, LENGTH PER PLAN
3. SHEATHE FROM HIGH TOP PLATE TO BLOCKING w/ 3/8" PLYWOOD w/ 8d AT 3" o.c. EDGES AND 12" o.c. FIELD, OR MATCH SHEARWALL SHEATHING AND NAILING, WHICHEVER IS MORE STRINGENT. SHEATHING TO EXTEND ENTIRE LENGTH OF BLOCKING
4. (2) CONT. CS14 w/ (2) 10d AT 4 1/8" o.c. U.N.O. ON PLAN
5. END LENGTH AND FASTENERS PER STRAP MFR. TO DEVELOP FULL STRAP CAPACITY

A. ROOF FRAMING MEMBERS NOT SHOWN FOR CLARITY

230 STEP AT TOP PLATE

230-220316 NO SCALE

WRIGHT
STRUCTURAL ENGINEERS
ENGINEERED IN THE USA
2 Venture, Suite 200
Irvine, CA 92618
(949) 486-1717 FAX (949) 486-1001
DA@wrightengineers.com
wrightengineers.com
Las Vegas | Orange County | Phoenix | Salt Lake City | Dallas

LICENSED STRUCTURAL ENGINEER ALLEN No.S5460 STATE OF CALIFORNIA 9/21/2023

HELIOTROPE DUPLEX
407 Heliotrope Ave.
Corona Del Mar, CA 92625

COPYRIGHT (C) WRIGHT ENGINEERS. USE OF THIS DRAWING AND ANY REPRODUCTIONS SHALL BE RESTRICTED TO THE ORIGINAL SITE FOR WHICH IT WAS PREPARED. REPRODUCTION OR RE-USE OF THIS DRAWING FOR ANY OTHER PURPOSE IS STRICTLY PROHIBITED.

NUMBER	DATE	DESCRIPTION
1	09-21-2023	PLAN CHECK REVISIONS

DATE: May 25, 2023
DESIGN BY: RO
PROJECT MGR: RO
PROJECT NO: 220376

FLOOR FRAMING DETAILS

S4.3-220376-D

S4.3

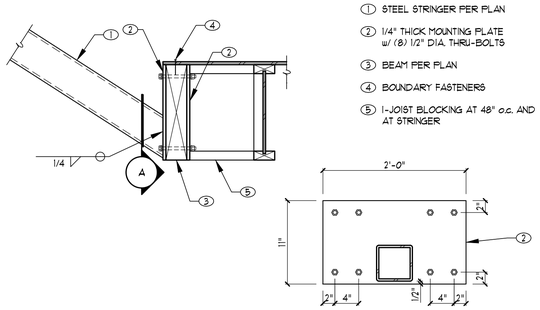

A SECTION

252 STAIR STRINGER AT BEAM

252-220376 NO SCALE

1. 1 3/4x11 7/8 LSL STRINGERS. ((3) TOTAL). LOCATE ONE AT EACH SIDE OF STAIRS AND ONE IN THE MIDDLE. MAXIMUM UNSUPPORTED LENGTH SHALL BE 12'-0"
2. 2x8 SOLID BLOCKING BETWEEN STRINGERS w/ (4) SDS1/4x4 1/2" SCREWS INTO BEAM
3. (2) SDS1/4x3 1/2" SCREWS STRINGER TO BLOCK (STAGGER AT MIDDLE STRINGER)
4. I-JOIST BLOCKING AT 48" o.c.
5. BEAM PER PLAN
6. (2) A34 CLIPS w/ 8 x 3 1/2" WOOD SCREWS IN LIEU OF NAILS
7. AT INTERIOR STRINGER, USE (1) 1 3/4x6 1/2 LSL SCAB FULL LENGTH OF STRINGER. STITCH NAIL SCAB TO LSL w/ (2) 16d AT 8" o.c.
8. 2x10 MIN. TREAD
9. BOUNDARY FASTENERS

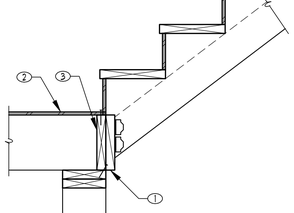

A PLAN VIEW

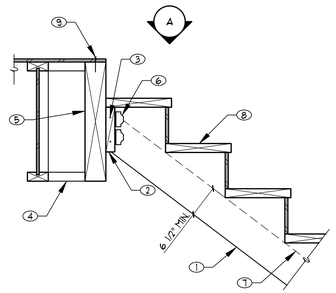

A. 3'-6" MAX. STAIR WIDTH

253 TYPICAL STAIRCASE FRAMING AT TOP SUPPORT

253-220376 NO SCALE

1. SEE DETAIL 253A/6A4 FOR STRINGER ATTACHMENT
2. LANDING BY OTHERS
3. CONT. 2x RIM

254 TYPICAL STAIRCASE FRAMING AT LANDING

254-220376 NO SCALE

A. ADJOINING FRAMING AS OCCURS NOT SHOWN FOR CLARITY

B. FOR NON-FUSIBLE BACKING AT CJP BEAM FLANGE-TO-COLUMN FLANGE WELDS (AT TOP OR BOTTOM BEAM FLANGE), REMOVE BACKING AND FOLLOW BALANCE OF INSTRUCTIONS NOTED FOR STEEL BACKING REMOVAL AT BOTTOM FLANGE

C. SEE AWS D1.8 FOR PROHIBITED WELDS AT STEEL BACKING FOR BEAM FLANGE-TO-COLUMN FLANGE GROOVE WELDS

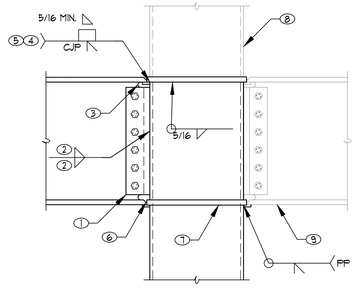

1. BOLTED SHEAR PLATE CONNECTION PER TYPICAL SHEAR PLATE CONNECTION SCHEDULE MODIFIED AS FOLLOWS:

   USE STD. HOLES AT BOTH BEAM AND SHEAR PLATE. BOLTS SHALL BE FULLY PRETENSIONED. FAYING SURFACES SHALL BE PREPARED AS REQ'D. FOR CLASS "A" SLIP-CRITICAL JOINTS (SEE G.S.N. FOR ADDITIONAL INFO.). WELD SHEAR PLATE TO COLUMN FLANGE AS SHOWN
2. 3/4 x SHEAR PLATE THICKNESS
3. WELD ACCESS HOLE PER TYPICAL WELD ACCESS HOLE AT STEEL BEAM DETAIL, TYP.
4. TYP. AT TOP AND BOTTOM FLANGES OF BEAM

   AT TOP FLANGE: LEAVE STEEL BACKING IN PLACE AND ADD FILLET WELD SHOWN UNDER BACKING

   AT BOTTOM FLANGE: REMOVE STEEL BACKING, BACKGOUGE TO SOUND WELD METAL, AND ADD FILLET WELD SHOWN. FILLET TOE SHALL BE LOCATED ON BEAM FLANGE BASE METAL UNLESS BASE METAL AND WELD ROOT ARE GROUND SMOOTH AFTER BACKING REMOVAL
5. "DEMAND CRITICAL" WELD
6. REMOVE WELD TABS AT BEAM FLANGES TO WITHIN 1/8" OF BASE METAL SURFACE AND END OF WELD FINISHED, TYP. FINISH SURFACE PER AWS D1.8
7. A572, GR. 50 CONTINUITY OR CAP PLATE, TYP. PLATE THICKNESS, "T", SHALL EQUAL OR EXCEED THE FOLLOWING:

   FOR MOMENT FRAME BEAM AT ONE SIDE OF COLUMN ONLY: 1/2 x ADJOINING BEAM FLANGE THICKNESS

   FOR MOMENT FRAME BEAMS AT BOTH SIDES OF COLUMN AND FOR ALL CAP PLATES: THICKEST ADJOINING BEAM FLANGE
8. CONTINUATION OF COLUMN, AS OCCURS
9. CONTINUATION OF BEAM, AS OCCURS

249 (SLRS) STEEL BEAM AT HSS COLUMN MOMENT CONNECTION

249-220376 NO SCALE

A. ADJOINING FRAMING AS OCCURS NOT SHOWN FOR CLARITY

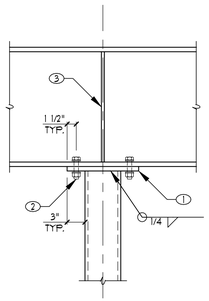

1. 3/4" CAP PLATE
2. (4) 3/4" DIA. BOLTS ON BEAM GAGE
3. 3/8" (AT W21 BEAMS AND SMALLER) OR 1/2" (AT W24 BEAMS AND LARGER) STIFFENER, TYP. BOTH SIDES OF BEAM WEB U.N.O.

250 STEEL BEAM AT STEEL COLUMN

8806-05 180130 NO SCALE

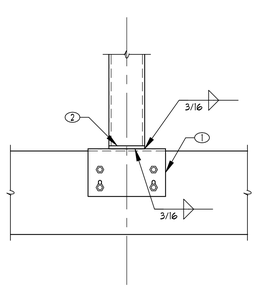

1. SIMPSON CCO COLUMN CAP
2. 1/2" THICK CAP PLATE

251 STEEL COLUMN AT WOOD BEAM

251-220376 NO SCALE

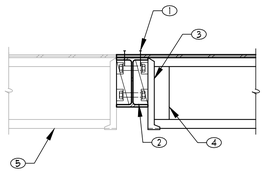

1. (2) HILTI X-U SHOT PINS AT 24" o.c. - STAGGERED
2. CONT. FILLER BLOCK EA. SIDE OF STEEL BEAM w/ (2) 3/4" DIA. x 5 1/2" WELDED STUDS AT 24" STAGGERED
3. HANGER PER G.S.N.
4. WEB STIFFENER
5. CONTINUATION OF FLOOR AS OCCURS

246 WOOD JOIST AT STEEL BEAM

246-220376 NO SCALE

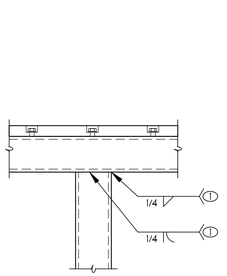

1. GRIND SMOOTH WHERE REQUIRED BY ARCH'L

247 TUBE BEAM AT TUBE COLUMN

247-220376 NO SCALE

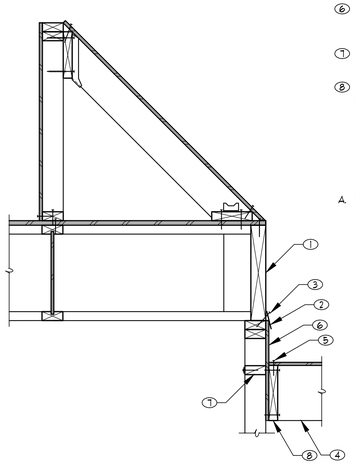

1. BEAM PER PLANS
2. A35 AT 24" o.c.
3. 16d AT 12" o.c. BEAM TO TOP PLATE
4. 2x BLOCKING AT 48" o.c.
5. BOUNDARY FASTENERS
6. 3/8" PLYWOOD (MIN.) w/ 8d AT 6" o.c. OR CONTINUATION OF SHEAR WALL AS OCCURS
7. 2x BLOCKING w/ CONT. CS16 STRAP w/ (2) 8d AT 4 1/8" o.c.
8. 2x LEDGER TO MATCH RAFTER DEPTH w/ (2) 1/4x4 1/2 SDS SCREWS AT 16" o.c. AT (1) SCREW AT 8" o.c. TO BLOCK

A. REFER TO DETAIL 214/6A2 FOR ITEMS SHOWN BUT NOT NOTED

248 MANSARD ROOF AT WOOD BEAM

248-220376 NO SCALE

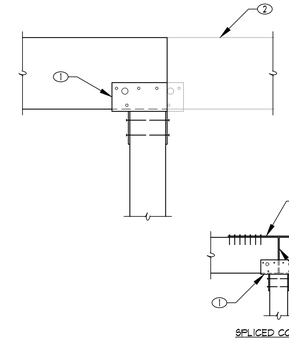

1. SIMPSON PC OR EPC TYPE POST CAP U.N.O. ON PLANS
2. BEAM CONTINUATION AS OCCURS - WHERE TWO BEAMS MEET AT POST, SPLICE DIRECTLY OVER CENTERLINE OF POST
3. SPLICE DIRECTLY OVER CENTERLINE OF POST
4. STRAP AS OCCURS PER PLAN, CENTER OVER SPLICE

SPLICED CONDITION

242 WOOD BEAM AT WOOD POST

WL01-02 070904 NO SCALE

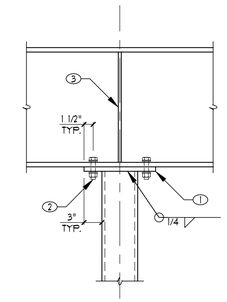

1. 3/4" CAP PLATE
2. (4) 3/4" DIA. BOLTS ON BEAM GAGE
3. 3/8" (AT W21 BEAMS AND SMALLER) OR 1/2" (AT W24 BEAMS AND LARGER) STIFFENER, TYP. BOTH SIDES OF BEAM WEB U.N.O.

A. ADJOINING FRAMING AS OCCURS NOT SHOWN FOR CLARITY

243 STEEL BEAM AT STEEL COLUMN

8506-05 180130 NO SCALE

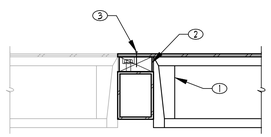

1. WEB STIFFENER
2. CONT. 3x WOOD NAILER w/ 3/4" DIA. x 2 1/2" THREADED NELSON STUD STAGGERED AT 24" o.c. NAILER WIDTH TO EXCEED BEAM WIDTH BY 1/2" MAX.
3. BOUNDARY FASTENERS

244 WOOD I-JOIST AT STEEL BEAM

244-220376 NO SCALE

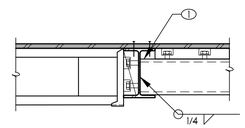

1. REMOVE 2'-0" PORTION OF FILLER BLOCK AT HSS TUBE

245 WOOD JOIST AT STEEL BEAM

245-220376 NO SCALE

WRIGHT
STRUCTURAL ENGINEERS
ENGINEERED IN THE USA
2 Venture, Suite 200
Irvine, CA 92618
(949) 474-1001
DA@wrightengineers.com
wrightengineers.com
Las Vegas | Orange County | Phoenix | Salt Lake City | Dallas

LICENSED STRUCTURAL ENGINEER * ALLEN * No.S5460 * STATE OF CALIFORNIA * 9/21/2023

HELIOTROPE DUPLEX
407 Heliotrope Ave.
Corona Del Mar, CA 92625

COPYRIGHT (C) WRIGHT ENGINEERS. USE OF THIS DRAWING AND ANY REPRODUCTIONS SHALL BE RESTRICTED TO THE ORIGINAL SITE FOR WHICH IT WAS PREPARED. REPRODUCTION OR RE-USE OF THIS DRAWING FOR ANY OTHER PURPOSE IS STRICTLY PROHIBITED.

NUMBER	DATE	DESCRIPTION
1	09-21-2023	PLAN CHECK REVISIONS

DATE: May 25, 2023
DESIGN BY: RO
PROJECT MGR: RO
PROJECT NO: 220376

FLOOR FRAMING DETAILS

S44-220376-D

S4.4

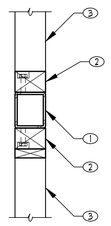

1. TUBE BEAM PER PLAN
2. CONT. 3x WOOD NAILER w/ 3/4" DIA. x 2 1/2" THREADED NELSON STUD STAGGERED AT 24" o.c. NAILER WIDTH TO EXCEED BEAM WIDTH BY 1/2" MAX.
3. STUDS PER PLANS

267 WOOD NAILER AT TUBE BEAM

267-220376 NO SCALE

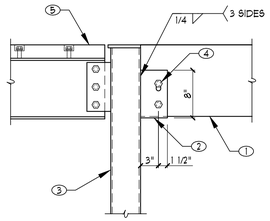

1. BEAM PER PLAN
2. 1/4" STEEL PLATES FORMING "U" SHAPED SADDLE
3. COLUMN PER PLAN
4. (2) 3/4" DIA. THRU BOLTS
5. CONT. 2x WOOD NAILER w/ 3/4" DIA. x 1 1/2" THREADED NELSON STUDS STAGGERED AT 24" o.c. NAILER WIDTH TO EXCEED BEAM WIDTH BY 1/2" MAX.

A. SEE DETAIL 227/S4.3 FOR ITEMS SHOWN BUT NOT NOTED

263 WOOD BEAM AT STEEL COLUMN

263-220376 NO SCALE

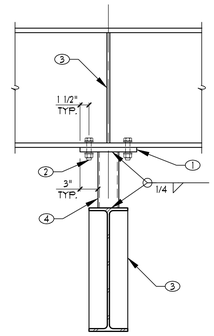

1. 3/4" CAP PLATE
2. (4) 3/4" DIA. BOLTS ON BEAM GAGE
3. 3/8" (AT W21 BEAMS AND SMALLER) OR 1/2" (AT W24 BEAMS AND LARGER) STIFFENER, TYP. BOTH SIDES OF BEAM WEB U.N.O.
4. HSS3 1/2x3 1/2x1/4 CRIPPLE COLUMN

A. ADJOINING FRAMING AS OCCURS NOT SHOWN FOR CLARITY

259 STEEL BEAM AT STEEL COLUMN

259-220376 NO SCALE

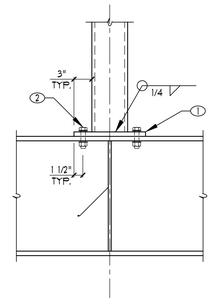

1. 3/4" BASE PLATE
2. (4) 3/4" DIA. BOLTS ON BEAM GAGE
3. 3/8" (AT W21 BEAMS AND SMALLER) OR 1/2" (AT W24 BEAMS AND LARGER) STIFFENER, TYP. BOTH SIDES OF BEAM WEB U.N.O.

A. ADJOINING FRAMING AS OCCURS NOT SHOWN FOR CLARITY

255 STEEL COLUMN AT STEEL BEAM

5506-08 080303 NO SCALE

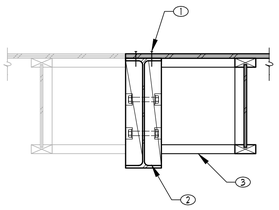

1. (2) HILTI X-U SHOT PINS AT 24" o.c. - STAGGERED
2. CONT. FILLER BLOCK EA. SIDE OF STEEL BEAM w/ (2) 3/4" DIA. x 3 1/2" WELDED STUDS AT 24" STAGGERED
3. I-JOIST BLOCKING AT 48" o.c.

268 WOOD JOIST AT STEEL BEAM

268-220376 NO SCALE

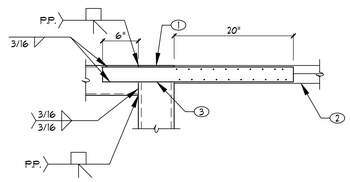

1. CAP PLATE PER TYPICAL DETAIL
2. TOP PLATES OR HEADER BEYOND
3. 1/4" THICK x 3" WIDE STEEL STRAP w/ (50) 10d TO TOP PLATE

A. ADJOINING FRAMING NOT SHOWN FOR CLARITY

264 HSS BEAM AT HSS COLUMN

264-220376 NO SCALE

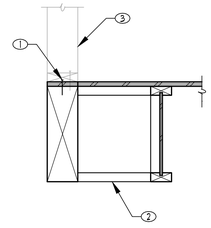

1. BOUNDARY FASTENERS
2. I-JOIST BLOCKING AT 48" o.c.
3. FRAMING ABOVE AS OCCURS

260 SHALLOW RIM AT CANTILEVER

260-220376 NO SCALE

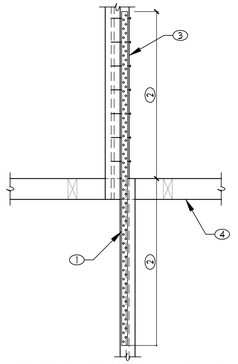

1. STRAP PER PLAN
2. MIN. STRAP END LENGTH AND FASTENERS PER TABLE BELOW
3. 2x4 SCAB. MIN. LENGTH AND NAILING PER TABLE BELOW
4. BEAM OR STUD WALL. BLOCKING BETWEEN JOISTS NOT SHOWN FOR CLARITY

STRAP	(2)	(3)
CS16	28" w/ (2) 8d AT 4 1/8" o.c.	2x4x4'-0" w/ 16d AT 6" o.c.
(2) CS14	36" w/ 8d AT 4 1/8" o.c.	2x6x6'-0" w/ 16d AT 6" o.c.

A. WHERE NO STRAP NOTED ON PLAN, USE (1) CS16

B. STRAP NOT REQUIRED IF I-JOIST(S) IS CONTINUOUS

C. STRAP AND BLOCK TO BE INSTALLED AT TOP CHORD OF I-JOIST

D. LVL OR LSL MEMBERS MAY BE USED IN LIEU OF I-JOIST

256 I-JOIST TO I-JOIST CONNECTION - PLAN VIEW

256-220376 NO SCALE

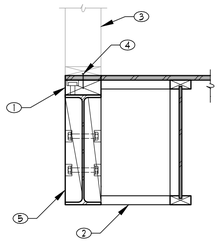

1. 3x NAILER BOLTED TO BEAM w/ 3/4" DIA. x 2 1/2" THREADED NELSON STUDS STAGGERED AT 48" o.c.
2. I-JOIST BLOCKING AT 48" o.c.
3. FRAMING ABOVE, AS OCCURS
4. BOUNDARY FASTENERS
5. FILLER BLOCK PER DETAIL 268/S4.6

269 I-JOIST AT STEEL BEAM

269-220376 NO SCALE

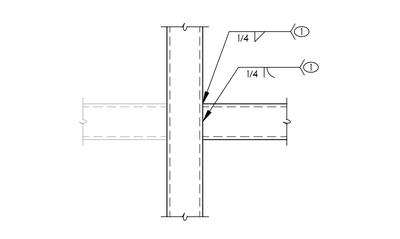

1. GRIND SMOOTH WHERE REQUIRED BY ARCH'L

265 TUBE BEAMS AT TUBE COLUMN

265-220376 NO SCALE

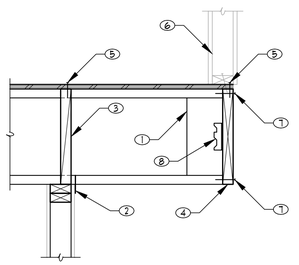

1. WEB STIFFENER
2. LTP4 AT 24" o.c., U.N.O. ON PLAN
3. 1 3/4" MIN. LSL BLOCKING
4. 1 3/4" LSL TO MATCH JOIST DEPTH
5. BOUNDARY FASTENERS
6. FRAMING ABOVE AS OCCURS
7. 16d EACH JOIST
8. A35 CLIP EACH JOIST, U.N.O. ON PLAN

A. LSL BLOCKING AND RIM MAY BE REPLACED w/ CROSS LAMINATED LVL BLOCKING AND RIM OF THE SAME DEPTH AND THICKNESS

261 CANTILEVER I-JOIST AT STUD WALL

WL05-04CA 111103 NO SCALE

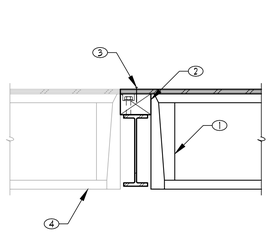

1. WEB STIFFENER
2. CONT. 2x WOOD NAILER w/ 3/4" DIA. x 1 1/2" THREADED NELSON STUD STAGGERED AT 24" o.c. NAILER WIDTH TO EXCEED BEAM WIDTH BY 1/2" MAX.
3. BOUNDARY FASTENERS
4. CONTINUATION OF JOISTS, AS OCCURS

257 WOOD I-JOIST AT STEEL BEAM

257-220376 NO SCALE

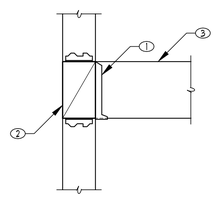

1. SIMPSON HUC610 HANGER
2. 6x10 BLOCK w/ (2) A35 CLIPS AT TOP AND BOTTOM. ATTACH STUD ON EA. SIDE OF BLOCK w/ (4) 16d
3. TRELLIS BEAM PER PLANS

270 TRELLIS AT STUD WALL

270-220376 NO SCALE

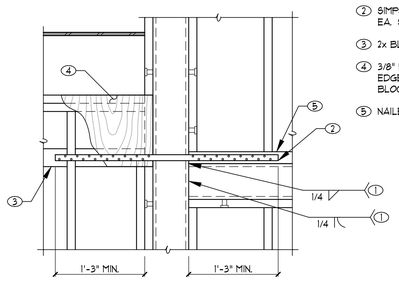

1. GRIND SMOOTH WHERE REQUIRED BY ARCH'L
2. SIMPSON CS14 STRAP w/ (26) 10d EA. SIDE
3. 2x BLOCKING BEHIND STRAP
4. 3/8" PLYWOOD w/ 8d AT 6" o.c. EDGE, 12" o.c. FIELD, FROM BLOCKING TO TOP PLATES
5. NAILER PER PLANS

266 STRAP AT TUBE BEAM

266-220376 NO SCALE

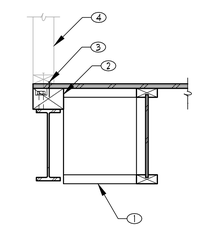

1. I-JOIST BLOCKING AT 48" o.c.
2. CONT. 3x WOOD NAILER w/ 3/4" DIA. x 2 1/2" THREADED NELSON STUD STAGGERED AT 24" o.c. NAILER WIDTH TO EXCEED BEAM WIDTH BY 1/2" MAX. USE 2x NAILER AT DECK
3. BOUNDARY FASTENERS
4. FRAMING ABOVE AS OCCURS

262 WOOD I-JOIST AT STEEL BEAM

262-220376 NO SCALE

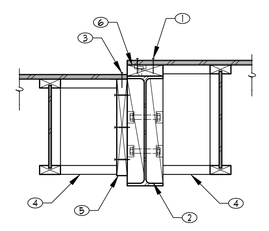

1. (2) ROWS OF BOUNDARY FASTENERS
2. CONT. FILLER BLOCK EA. SIDE OF STEEL BEAM w/ (2) 3/4" DIA. x 2 1/2" WELDED STUDS AT 24" STAGGERED
3. BOUNDARY FASTENERS
4. I-JOIST BLOCKING AT 48" o.c.
5. 1 3/4" LEDGER TO MATCH JOIST DEPTH w/ (3) 1/4x3 1/2 SDS SCREWS AT 16" o.c.
6. CONT. 2x WOOD NAILER w 3/4" x 1 1/2" THREADED NELSON STUD STAGGERED AT 24" o.c. NAILER WIDTH TO EXCEED BEAM WIDTH BY 1/2" MAX.

258 WOOD I-JOIST AT STEEL BEAM

258-220376 NO SCALE

WRIGHT
STRUCTURAL ENGINEERS
ENGINEERED IN THE USA
2 Venture, Suite 200
Irvine, CA 92618
(949) 486-1001
DA@wrightengineers.com
wrightengineers.com
Las Vegas | Orange County | Phoenix | Salt Lake City | Dallas

LICENSED STRUCTURAL ENGINEER ALLEN No.S5460 STATE OF CALIFORNIA 9/21/2023

HELIOTROPE DUPLEX
407 Heliotrope Ave.
Corona Del Mar, CA 92625

COPYRIGHT (C) WRIGHT ENGINEERS. USE OF THIS DRAWING AND ANY REPRODUCTIONS SHALL BE RESTRICTED TO THE ORIGINAL SITE FOR WHICH IT WAS PREPARED. REPRODUCTION OR RE-USE OF THIS DRAWING FOR ANY OTHER PURPOSE IS STRICTLY PROHIBITED.

NUMBER	DATE	DESCRIPTION
1	09-21-2023	PLAN CHECK REVISIONS

DATE: May 25, 2023
DESIGN BY: RO
PROJECT MGR: RO
PROJECT NO: 220376

FLOOR FRAMING DETAILS

S45-220376-D

S4.5

① SIMPSON ECCOL COLUMN CAP

② BUILD UP COLUMN, PER ARCH'L

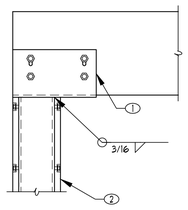

283 WOOD BEAM AT STEEL COLUMN

283-220376 NO SCALE

① 3/8" (AT W21 BEAMS AND SMALLER) OR 1/2" (AT W24 BEAMS AND LARGER) STIFFENER, TYP. BOTH SIDES OF BEAM WEB U.N.O.

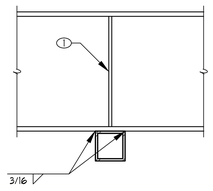

A. ADJOINING FRAMING AS OCCURS NOT SHOWN FOR CLARITY

284 STEEL BEAM AT STEEL TUBE HEADER

284-220376 NO SCALE

① CONT. 1 3/4" LSL LEDGER W/ (3) 1/4x3 1/2 SDS SCREWS AT 16" o.c.

② BOUNDARY FASTENERS

③ I-JOIST BLOCKING AT 48" o.c.

④ BEAM PER PLANS

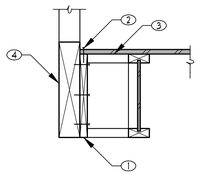

285 I-JOIST AT WOOD BEAM

285-220376 NO SCALE

① CONT. HSS9x3x1/4 AT GUARDRAIL

② CONT. FILLER BLOCK EA. SIDE OF STEEL BEAM W/ (2) 3/4" DIA. x 5 1/2" WELDED STUDS AT 24" STAGGERED

③ HANGER PER G.S.N.

④ WEB STIFFENER

⑤ BOUNDARY FASTENERS

⑥ CONT. 1 3/4" LSL LEDGER W/ (5) 1/4x4 1/2 SDS SCREWS AT 16" o.c.

⑦ GLASS GUARDRAIL AND ATTACHMENT BY OTHERS

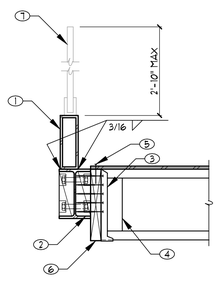

A. REFER TO ARCH'L FOR TUBE WEATHER PROTECTION AT RAIL

286 GLASS GUARDRAIL AT STEEL BEAM

286-220376 NO SCALE

① STEEL COLUMN PER PLAN

② SHEAR WALL PER PLAN

③ EDGE NAILING

④ 3/4" THREADED WELDED STUD AT 32" o.c. L = 4" MIN. AT (2) 2x STUDS, 4 1/2" MIN. AT 4x POST, 6 1/2" MIN. AT 6x POST

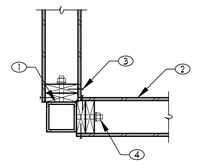

282 WOOD SHEAR WALL AT SHARED STEEL COLUMN - PLAN VIEW

282-220376 NO SCALE

① 3/8" (AT W21 BEAMS AND SMALLER) OR 1/2" (AT W24 BEAMS AND LARGER) STIFFENER, TYP. BOTH SIDES OF BEAM WEB U.N.O.

② (4) 3/4" DIA. LAG SCREWS W/ 3" MIN. EMBEDMENT THRU BEAM FLANGE

③ BEAM PER PLANS

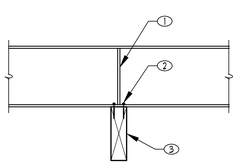

A. ADJOINING FRAMING AS OCCURS NOT SHOWN FOR CLARITY

281 STEEL BEAM AT WOOD BEAM

281-220376 NO SCALE

① 1/2" STIFFENER EA. SIDE OF BEAM FLANGE

② 8" MAX. DIAMETER HOLE PLACED IN CENTER OF BEAM WEB

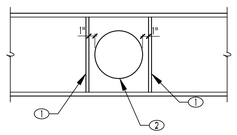

A. ADJOINING FRAMING NOT SHOWN FOR CLARITY

280 HOLE IN STEEL BEAM WEB

280-220376 NO SCALE

① 3/16 2-12 / 3/16 2-12

② 2'-2"

③ 2'-2"

④ 3

⑤ 1 9/16"

⑥ 2

⑦ 3"

⑧ 1

⑨ 1/4

⑩ 3 SIDES

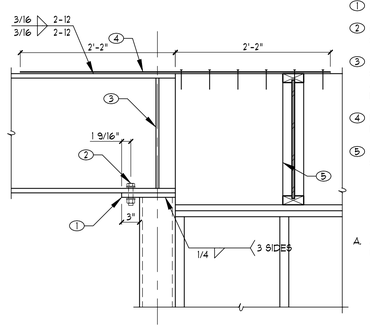

① 3/4" CAP PLATE

② (2) 3/4" DIA. BOLTS ON BEAM GAGE

③ 3/8" (AT W21 BEAMS AND SMALLER) OR 1/2" (AT W24 BEAMS AND LARGER) STIFFENER, TYP. BOTH SIDES OF BEAM WEB U.N.O.

④ 1/4" THICK x 3" WIDE STRAP W/ (56) 16d TO BLOCKING

⑤ 3 1/2" LSL BLOCKING UNDER STRAP

A. ADJOINING FRAMING AS OCCURS NOT SHOWN FOR CLARITY

279 WOOD BEAM AT EYEBROW

279-220376 NO SCALE

① EYEBROW BEAM PER PLANS

② (2) 1/4x3 1/2 SDS SCREWS AT EA. STUD

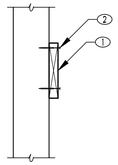

276 CANOPY BEAM AT STUD WALL

276-220376 NO SCALE

① (2) ROWS OF BOUNDARY FASTENERS

② 3'-0" LONG FILLER BLOCK EA. SIDE OF STEEL BEAM AT PERPEDICULAR WOOD BEAM W/ (4) 3/4" DIA. x 2 1/2" WELDED STUDS

③ CONT. 2x WOOD NAILER W 3/4" x 1 1/2" THREADED NELSON STUD STAGGERED AT 24" o.c. NAILER WIDTH TO EXCEED BEAM WIDTH BY 1/2" MAX.

④ I-JOIST BLOCKING AT 48" o.c.

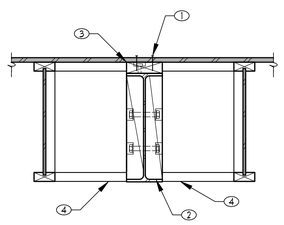

277 WOOD I-JOIST AT STEEL BEAM

277-220376 NO SCALE

① WEB STIFFENER WHERE SPECIFIED ON PLAN

② JOIST TO FIT SNUG AGAINST FACE OF BEAM

③ BOUNDARY FASTENERS

④ HANGER PER G.S.N.

⑤ CONT. 2x LEDGER W/ (3) 1/4x4 1/2 SDS SCREWS AT 24" o.c.

⑥ GUARDRAIL BY OTHERS

⑦ I-JOIST PER PLANS, OR I-JOIST BLOCKING AT 48" o.c.

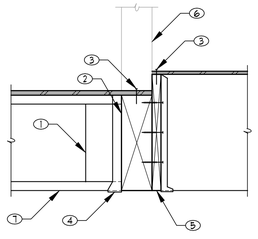

278 WOOD I-JOIST AT EYEBROW

278-220376 NO SCALE

① (2) HILTI X-U SHOT PINS AT 24" o.c. - STAGGERED

② CONT. FILLER BLOCK EA. SIDE OF STEEL BEAM W/ (2) 3/4" DIA. x 5 1/2" WELDED STUDS AT 24" STAGGERED

③ HANGER PER G.S.N.

④ WEB STIFFENER

⑤ 2x LEDGER TO MATCH JOIST DEPTH W/ (3) 1/4x3 1/2 SDS SCREWS AT 16" o.c.

⑥ BOUNDARY FASTENERS

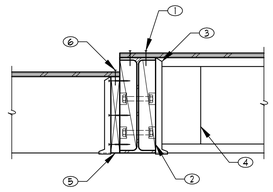

271 WOOD JOIST AT STEEL BEAM

271-220376 NO SCALE

① (2) HILTI X-U SHOT PINS AT 24" o.c. - STAGGERED

② CONT. FILLER BLOCK EA. SIDE OF STEEL BEAM W/ (2) 3/4" DIA. x 5 1/2" WELDED STUDS AT 24" STAGGERED

③ HANGER PER G.S.N.

④ BOUNDARY FASTENERS

⑤ 1 3/4 LSL LEDGER TO MATCH JOIST DEPTH W/ (4) 1/4x3 1/2 SDS SCREWS AT 12" o.c.

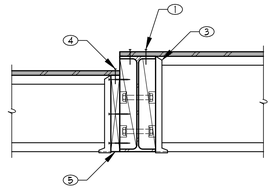

272 WOOD I-JOIST AT STEEL BEAM

272-220376 NO SCALE

① 3x NAILER BOLTED TO BEAM W/ 3/4" DIA. x 2 1/2" THREADED NELSON STUDS STAGGERED AT 24" o.c.

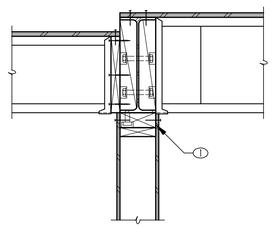

A. REFER TO DETAIL 272/S4.6 FOR ITEMS SHOWN BUT NOT NOTED

273 WOOD I-JOIST AT STEEL BEAM

273-220376 NO SCALE

① HEADER PER PLAN

② SOLID 4x BLOCK TO RECEIVE STRAP

③ PLYWOOD SHEATHING PER PLAN OR SCHEDULE. EDGE NAIL ALONG BLOCKING AND AT EDGES OF OPENING

④ SIMPSON CS16 STRAP

⑤ 8d STRAP NAILING STAGGERED TO MATCH SHEAR WALL NAILING. EXTEND STRAP AND BLOCKING TO END OF SHEAR WALL PER PLAN

⑥ 15" MIN. END EXTENSION W/ (14) 8d TYPICAL U.N.O. ON PLAN

A. PLACE STRAP OVER PLYWOOD SHEATHING

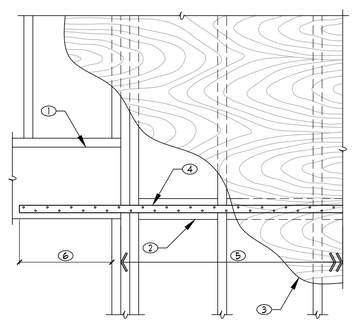

274 HEADER STRAP AT SHEAR WALL

W108-12 080106 NO SCALE

WRIGHT
STRUCTURAL ENGINEERS
ENGINEERED IN THE USA
2 Venture, Suite 200
Irvine, CA 92618
949.727.1001
DA@wrightengineers.com
wrightengineers.com
Las Vegas | Orange County | Phoenix | Salt Lake City | Dallas

LICENSED STRUCTURAL ENGINEER ALLEN V. DA No.S5460 STATE OF CALIFORNIA 9/21/2023

HELIOTROPE DUPLEX
407 Heliotrope Ave.
Corona Del Mar, CA 92625

COPYRIGHT (C) WRIGHT ENGINEERS, USE OF THIS DRAWING AND ANY REPRODUCTIONS SHALL BE RESTRICTED TO THE ORIGINAL SITE FOR WHICH IT WAS PREPARED. REPRODUCTION OR RE-USE OF THIS DRAWING FOR ANY OTHER PURPOSE IS STRICTLY PROHIBITED.

NUMBER	DATE	DESCRIPTION
1	09-21-2023	PLAN CHECK REVISIONS

DATE: May 25, 2023
DESIGN BY: RO
PROJECT MGR: RO
PROJECT NO: 220376

FLOOR FRAMING DETAILS

S46-220376-D

S4.6

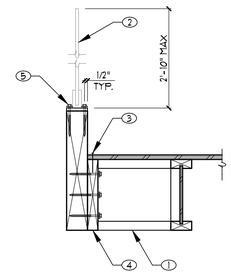

1. I-JOIST BLOCKING AT 48" o.c.
2. GLASS GUARDRAIL AND ATTACHMENT BY OTHERS
3. BOUNDARY FASTENERS
4. CONT. 1 3/4" LSL LEDGER w/ (3) 1/4x3 1/2 SDS SCREWS AT 16" o.c.
5. CONT. 1/4" THICK, 3 1/2" WIDE PLATE w/ (2) 5/16" DIA. LAG SCREWS w/ 6" EMBEDMENT AT 6" o.c.

A. REFER TO ARCH'L FOR PLATE WEATHER PROTECTION AT RAIL

287 GLASS GUARDRAIL AT WOOD BEAM

287-220376 NO SCALE

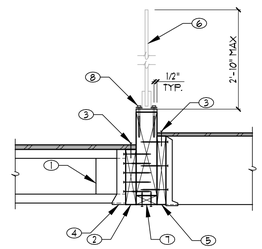

1. WEB STIFFENER WHERE SPECIFIED ON PLAN
2. CONT. 1 3/4" LSL LEDGER w/ (5) 1/2 x 4 1/2 SDS SCREWS AT 16" o.c.
3. BOUNDARY FASTENERS
4. HANGER PER GSN
5. CONT. 2x LEDGER w/ (3) 1/4x4 1/2 SDS SCREWS AT 24" o.c.
6. GLASS GUARDRAIL AND ATTACHMENT BY OTHERS
7. CONT. 2x FILLER BLOCK w/ (2) 1/4x3 SDS SCREWS AT 24" o.c. STAGGERED
8. CONT. 1/4" THICK, 3 1/2" WIDE PLATE w/ (2) 5/16" DIA. LAG SCREWS w/ 6" EMBEDMENT AT 6" o.c.

A. REFER TO ARCH'L FOR PLATE WEATHER PROTECTION AT RAIL

1 288 WOOD I-JOIST AT EYEBROW

288-220376 NO SCALE

WRIGHT STRUCTURAL ENGINEERS
ENGINEERED IN THE USA
2 Venture, Suite 200
Irvine, CA 92618
(949) 474-4001
CA@wrightengineers.com
wrightengineers.com
Las Vegas | Orange County | Phoenix | Salt Lake City | Dallas

LICENSED STRUCTURAL ENGINEER ALLEN No.S54460 STATE OF CALIFORNIA
9/21/2023

HELIOTROPE DUPLEX
407 Heliotrope Ave.
Corona Del Mar, CA 92625

COPYRIGHT (C) WRIGHT ENGINEERS. USE OF THIS DRAWING AND ANY REPRODUCTIONS SHALL BE RESTRICTED TO THE ORIGINAL SITE FOR WHICH IT WAS PREPARED. REPRODUCTION OR RE-USE OF THIS DRAWING FOR ANY OTHER PURPOSE IS STRICTLY PROHIBITED.

NUMBER	DATE	DESCRIPTION
1	09-21-2023	PLAN CHECK REVISIONS

DATE: May 25, 2023
DESIGN BY: RO
PROJECT MGR: RO
PROJECT NO: 220376

FLOOR FRAMING DETAILS

S4.7

S47-220376-D

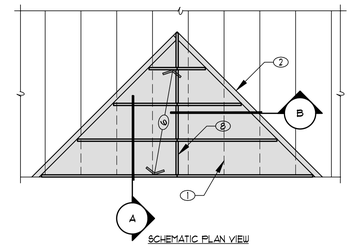

1. RAFTER PER PLAN
2. CONT. 2x4 VALLEY PLATE. ATTACH w/ (2) 16d EACH RAFTER. BOUNDARY FASTEN OVERBUILD SHEATHING ALONG PLATE
3. A35 CLIP EACH BLOCK
4. BOUNDARY FASTENERS
5. 2x6 OVERBUILD RAFTER AT 24" o.c. ATTACH w/ 16d TOENAIL EACH RAFTER (24" o.c.)
6. CRIPPLE WALL
7. 3/8" PLYWOOD w/ 8d AT 6" o.c.
8. 2x12 RIDGE BEAM
9. LUS26 HANGER, TYP.
10. 2x6 COLLAR TIE AT EACH OVERBUILD RAFTER w/ (3) 16d TO RAFTER

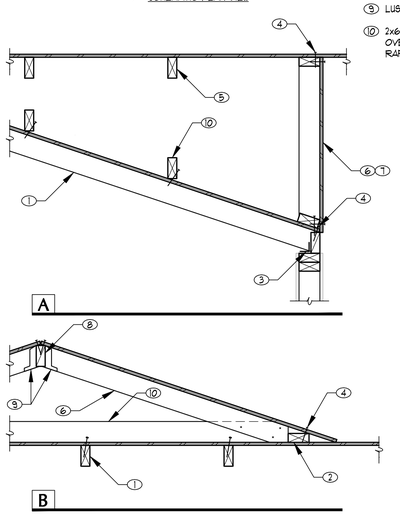

313 TYPICAL RAFTER OVERBUILD FRAMING

313-220376 NO SCALE

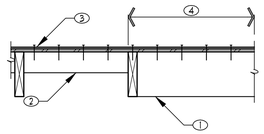

1. BEAM PER PLANS
2. SOLID BLOCKING TO RECEIVE STRAP NAILING. EXTEND BLOCKING BEYOND END OF BEAM WHERE NOTED ON PLAN
3. STRAP PER PLAN OR NOTE "A". STRAP SHALL BE CONTINUOUS ACROSS ENTIRE LENGTH OF BLOCKING

STRAP	① BLOCKING	④ STRAP LENGTH
CS16	2x	2'-0"
(2) CS16	4x	4'-0"
(2) CS14 OR CMSTC16	4x	6'-0"
CMST14	4x	8'-0"
CMST12	4x	10'-0"

A. WHERE NO STRAP NOTED ON PLAN, USE SIMPSON CS16 w/ (2) 8d AT 4 1/8" o.c.

B. SHEAR WALL SHEATHING NOT SHOWN FOR CLARITY

309 DRAG STRAP AT END OF BEAM

309-220376 NO SCALE

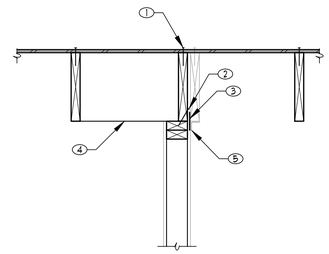

1. BOUNDARY FASTENERS
2. 16d TOENAIL AT 12" o.c.
3. LTP4, WHERE NOTED ON PLAN.
4. SOLID 2x BLOCKING AT 48" o.c.
5. RAFTER MAY BE OFFSET FROM WALL AND CLIPPED TO TOP PLATE w/ A35 AT 24" o.c. U.N.O. ON PLAN

305 WOOD RAFTER AT WALL

317-201612 NO SCALE

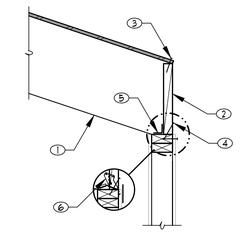

1. RAFTER PER PLAN. NOTCH RAFTER TO PROVIDE FULL BEARING AT TOP PLATE (1 1/2" MAX. NOTCH)
2. 2x SOLID BLOCKING
3. BOUNDARY FASTENERS
4. (3) 16d TOENAILS PER BLOCK
5. A35 AT 24" o.c.
6. AS AN ALTERNATE, SIMPSON VPA2 MAY BE USED IN LIEU OF NOTCH PER ①

301 WOOD RAFTER AT STUD WALL

301-220376 NO SCALE

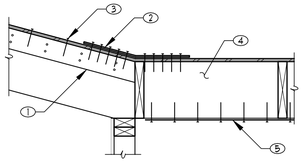

1. 2x4 x 2'-6" SCAB w/ (10) 16d EVENLY SPACED, AS REQ'D
2. SIMPSON LSTA18 STRAP
3. BOUNDARY FASTEN ALONG RAFTER
4. 2x BLOCKING, LENGTH PER PLANS
5. CONT. CS16 TO EXTEND FULL LENGTH OF BLOCKING w/ (2) 10d AT 4 1/8" o.c.

310 DRAG RAFTER AT END OF BLOCKING

310-220376 NO SCALE

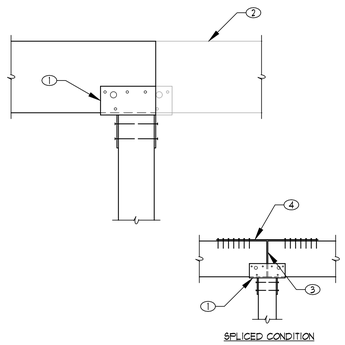

1. SIMPSON PC OR EPC TYPE POST CAP U.N.O. ON PLANS
2. BEAM CONTINUATION AS OCCURS - WHERE TWO BEAMS MEET AT POST, SPLICE DIRECTLY OVER CENTERLINE OF POST
3. SPLICE DIRECTLY OVER CENTERLINE OF POST
4. STRAP AS OCCURS PER PLAN. CENTER OVER SPLICE

306 WOOD BEAM AT WOOD POST

WW01-02 070904 NO SCALE

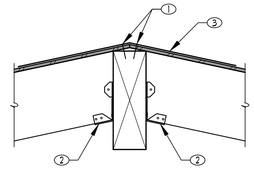

1. BOUNDARY FASTENERS
2. HANGER PER PLANS
3. STRAP PER PLANS

302 WOOD RAFTER AT WOOD BEAM

302-220376 NO SCALE

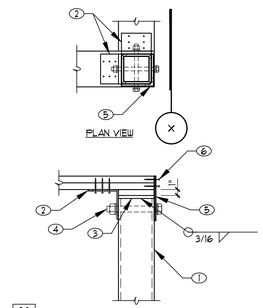

1. STEEL COLUMN PER PLAN
2. L5x5x1/4 ANGLE w/ (6) 1/4x2 1/2 SDS SCREWS EA. ANGLE
3. 1/2" CAP PLATE
4. 1" DIA. THRU-BOLT IN 2" VERT. SLOTTED HOLE
5. 1/4" THICK CORNER STEEL PLATE w/ 2" VERT. SLOTTED HOLE AT BOLTS
6. (2) 1/4x2 1/2 SDS SCREWS INTO EA. TOP PLATE

A. ADJOINING FRAMING NOT SHOWN FOR CLARITY

314 STEEL COLUMN AT TOP PLATES

314-220376 NO SCALE

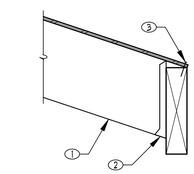

1. RAFTER PER PLAN.
2. HANGER PER PLAN
3. BOUNDARY FASTENERS

311 WOOD RAFTER AT BEAM

311-220376 NO SCALE

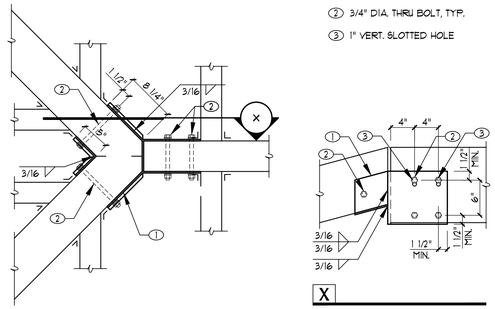

1. 1/4" STEEL PLATE w/ DIMENSIONS AS NOTED
2. 3/4" DIA. THRU BOLT, TYP.
3. 1" VERT. SLOTTED HOLE

307 HIP BEAMS AT RIDGE BEAM

307-220376 NO SCALE

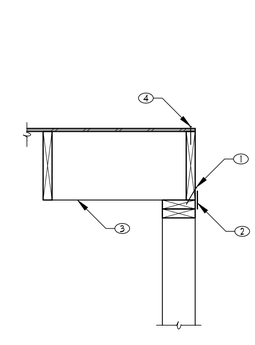

1. 16d TOENAILS AT 8" o.c., U.N.O.
2. LTP4 CLIP AT 36" o.c. U.N.O.
3. SOLID 2x BLOCKING AT 48" o.c. w/ (3) 16d TOENAILS INTO TOP PLATE EACH BLOCK
4. BOUNDARY FASTENERS

303 WOOD RAFTER AT GABLE END

WW06-18 180907 NO SCALE

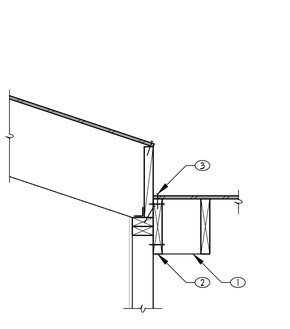

1. 2x BLOCKING AT 48" o.c.
2. CONT. 2x LEDGER w/ (2) 1/4x4 SDS SCREWS AT 16" o.c.
3. BOUNDARY FASTENERS

A. REFER TO DETAIL 301/S5.1 FOR ITEMS SHOWN BUT NOT NOTED

315 WOOD RAFTER AT STUD WALL

315-220376 NO SCALE

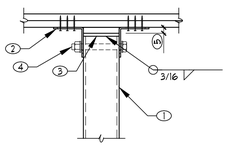

1. STEEL COLUMN PER PLAN
2. L5x5x1/4 ANGLE EA. SIDE OF STEEL COLUMN w/ (6) 1/4x2 1/2 SDS SCREWS EA. ANGLE
3. 1/2" CAP PLATE
4. 1" DIA. THRU-BOLT IN 2" VERT. SLOTTED HOLE
5. 1" GAP, TYP. AT DETAIL 312A, NO GAP REQ'D

A. ADJOINING FRAMING NOT SHOWN FOR CLARITY

312 STEEL COLUMN AT TOP PLATES

312-220376 NO SCALE

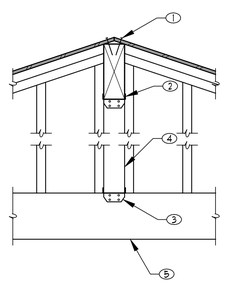

1. BOUNDARY FASTENERS
2. SIMPSON "PC" POST CAP, U.N.O.
3. SIMPSON "PC" POST BASE, U.N.O.
4. CRIPPLE POST PER PLAN
5. BEAM PER PLAN

308 RIDGE BEAM AT CRIPPLE POST

308-220376 NO SCALE

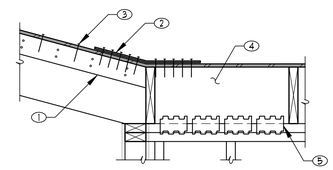

1. SCAB PER TABLE BELOW TO FIT SNUG AGAINST EAVE BLOCKING
2. STRAP PER PLAN OR NOTE "A" BELOW
3. BOUNDARY FASTEN ALONG RAFTER

A. WHERE STRAP NOT INDICATED ON PLAN, PROVIDE SIMPSON LSTA18.

B. WHERE ALL CLIPS CANNOT BE INSTALLED ON FIRST EAVE BLOCK, INSTALL REMAINING CLIPS ON SECOND BLOCK AND STRAP BLOCK-TO-BLOCK w/ LSTA30.

STRAP	① SCAB	FASTENERS (SCAB TO SCAB AND SCAB TO RAFTER	⑤ CLIPS	④ BLOCKING
LSTA18	2x4 x 2'-6"	(10) 16d EVENLY SPACED	(2) LTP4, EVENLY SPACED	2x
LSTA30	2x4 x 2'-6"	(14) 16d EVENLY SPACED	(3) LTP4, EVENLY SPACED	2x
MSTC28	(2) 2x6 x 5'-0"	(24) 16d EVENLY SPACED	(3) LTP4, EVENLY SPACED, EACH FACE	4x
MSTC40	(2) 2x6 x 8'-6"	(36) 16d EVENLY SPACED	(4) LTP4, EVENLY SPACED, EACH FACE	4x
MST60	2x6 x 10'-0"	(46) 16d EVENLY SPACED	(3) LTP4, EVENLY SPACED, EACH FACE OF EACH BLOCK	(2) BAYS OF 4x
(2) MST60	(2) 2x6 x 10'-0"	(46) 16d EVENLY SPACED, EACH SCAB	(4) LTP4, EVENLY SPACED EACH FACE OF EACH BLOCK	(2) BAYS OF 6x

304 DRAG RAFTER AT END OF WALL

304-220376 NO SCALE

WRIGHT
STRUCTURAL ENGINEERS
ENGINEERED IN THE USA
2 Venture, Suite 200
Irvine, CA 92618
(949) 486-1001
DA@wrightengineers.com
wrightengineers.com
Las Vegas | Orange County | Phoenix | Salt Lake City | Dallas

LICENSED STRUCTURAL ENGINEER ALLEN No.S5460 STATE OF CALIFORNIA 9/21/2023

HELIOTROPE DUPLEX
407 Heliotrope Ave.
Corona Del Mar, CA 92625

COPYRIGHT (C) WRIGHT ENGINEERS. USE OF THIS DRAWING AND ANY REPRODUCTIONS SHALL BE RESTRICTED TO THE ORIGINAL SITE FOR WHICH IT WAS PREPARED. REPRODUCTION OR RE-USE OF THIS DRAWING FOR ANY OTHER PURPOSE IS STRICTLY PROHIBITED.

NUMBER	DATE	DESCRIPTION
1	09-21-2023	PLAN CHECK REVISIONS

DATE: May 25, 2023
DESIGN BY: RO
PROJECT MGR: RO
PROJECT NO: 220376

ROOF FRAMING DETAILS

S51-220376-D

S5.1

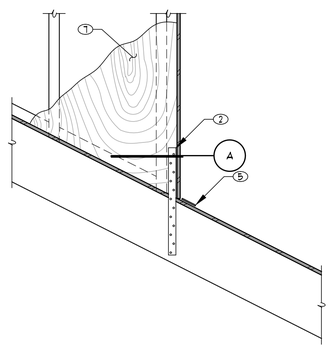

1. 3-PLY RAFTER ALIGNED W/ CHIMNEY ABOVE
2. SIMPSON LSTA18 STRAP, U.N.O. ON PLAN
3. LEDGER PER PLAN
4. 2x4 FLAT BLOCKING. EXTEND BLOCKING PER PLAN
5. CONT. CS16 STRAP W/ (2) 8d AT 4 1/8" o.c. INSTALL STRAP ON TOP OF ROOF SHEATHING
6. FASTEN CHIMNEY TO FRAMING MEMBER W/ 16d AT 3" o.c. STAGGERED
7. SHEATHE CHIMNEY W/ 7/16" MIN. PLYWOOD W/ 8d AT 6" o.c. EDGES AND 12" o.c. FIELD

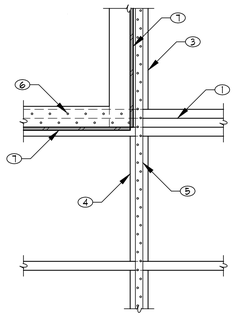

A FLAT BLOCKING AT CHIMNEY

A. STRAP END OF RAFTER TO DOUBLE STUDS OR BEAM AS OCCURS W/ (2) H6 TIES U.N.O. PER PLAN.

323 CHIMNEY AT RAFTER

WA01-53 200519 NO SCALE

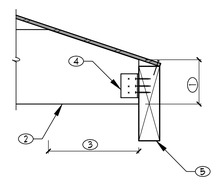

1. 1/3 x GLULAM DEPTH, MIN.
2. GLULAM PER PLANS
3. 3 x GLULAM DEPTH, MAX.
4. L3x3x1/4x4" w/ (3) 1/4x2 1/2 SDS SCREWS TO BOTH GLULAM AND HEADER. ANGLE EA. SIDE OF GLULAM.
5. HEADER PER PLANS

320 SCARF CUT GLULAM AT HEADER

320-220376 NO SCALE

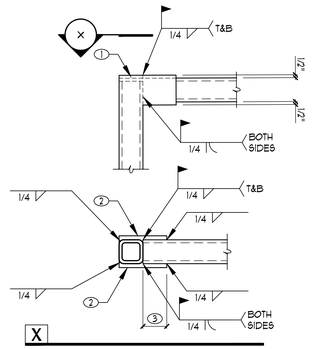

1. SEE TYPICAL COLUMN CAP DETAIL
2. PLATE TO MATCH BEAM THICKNESS
3. LENGTH = COLUMN WIDTH

A. ADJOINING FRAMING NOT SHOWN FOR CLARITY

321 TUBE BEAM AT TUBE COLUMN

318-202771 NO SCALE

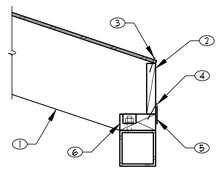

1. RAFTER PER PLAN. NOTCH RAFTER TO PROVIDE FULL BEARING AT NAILER (1 1/2" MAX. NOTCH)
2. 2x SOLID BLOCKING
3. BOUNDARY FASTENERS
4. (3) 16d TOENAILS PER BLOCK
5. A35 AT 24" o.c.
6. CONT. 3x WOOD NAILER w/ 3/4" DIA. x 2 1/2" THREADED NELSON STUD STAGGERED AT 24" o.c. NAILER WIDTH TO EXCEED BEAM WIDTH BY 1/2" MAX.

322 WOOD RAFTER AT HSS TUBE

322-220376 NO SCALE

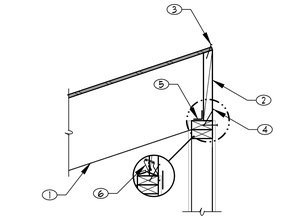

1. RAFTER PER PLAN. NOTCH RAFTER TO PROVIDE FULL BEARING AT TOP PLATE (1 1/2" MAX. NOTCH)
2. 2x SOLID BLOCKING
3. BOUNDARY FASTENERS
4. (3) 16d TOENAILS PER BLOCK
5. A35 AT 24" o.c.
6. AS AN ALTERNATE, SIMPSON VPA2 MAY BE USED IN LIEU OF NOTCH PER (1)

316 WOOD RAFTER AT STUD WALL

316-220376 NO SCALE

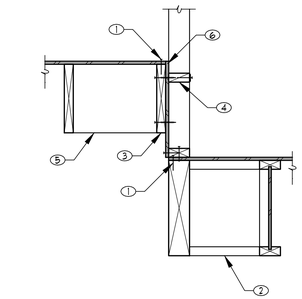

1. BOUNDARY FASTENERS
2. I-JOIST BLOCKING AT 48" o.c.
3. 2x LEDGER TO MATCH RAFTER DEPTH w/ (2) 1/4x3 1/2 SDS SCREWS AT EA. STUD AND (1) SCREW AT 8" o.c. TO BLOCK
4. 2x BLOCK w/ CONT. CS16 STRAP w/ (2) 8d AT 4 1/8" o.c.
5. 2x BLOCK AT 48" o.c.
6. 3/8" PLYWOOD w/ 8d AT 6" o.c. AND 12" o.c., U.N.O. PER PLANS

317 WOOD RAFTER AT STUD WALL

317-220376 NO SCALE

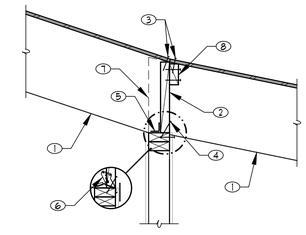

1. RAFTER PER PLAN. NOTCH RAFTER TO PROVIDE FULL BEARING AT TOP PLATE (1 1/2" MAX. NOTCH)
2. 2x SOLID BLOCKING
3. BOUNDARY FASTENERS
4. (3) 16d TOENAILS PER BLOCK
5. A35 AT 24" o.c.
6. AS AN ALTERNATE, SIMPSON VPA2 MAY BE USED IN LIEU OF NOTCH PER (1)
7. LINE OF RAFTER BEYOND
8. 2x BLOCK w/ (2) 1/4x3 SDS SCREWS AT 12" o.c.

318 WOOD RAFTER AT STUD WALL

318-220376 NO SCALE

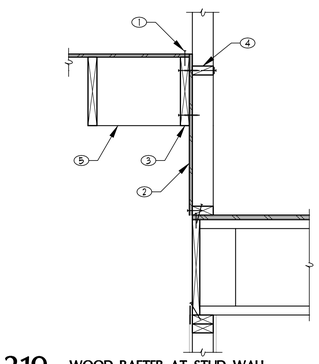

1. BOUNDARY FASTENERS
2. 3/8" PLYWOOD w/ 8d AT 6" o.c. AND 12" o.c., U.N.O. PER PLANS
3. 2x LEDGER TO MATCH RAFTER DEPTH w/ (2) 1/4x3 1/2 SDS SCREWS AT EA. STUD AND (1) SCREW AT 8" o.c. TO BLOCK
4. 2x BLOCK w/ CONT. CS16 STRAP w/ (2) 8d AT 4 1/8" o.c.
5. 2x BLOCK AT 48" o.c.

A. SEE DETAIL 202/S4.1 FOR ITEMS SHOWN BUT NOT NOTED

319 WOOD RAFTER AT STUD WALL

319-220376 NO SCALE

WRIGHT
STRUCTURAL ENGINEERS
ENGINEERED IN THE USA
2 Venture, Suite 200
Irvine, CA 92618
(949) 727-1003
CA@wrightengineers.com
wrightengineers.com
Las Vegas | Orange County | Phoenix | Salt Lake City | Dallas

LICENSED STRUCTURAL ENGINEER ALLEN No.S5460 STATE OF CALIFORNIA 9/21/2023

HELIOTROPE DUPLEX
407 Heliotrope Ave.
Corona Del Mar, CA 92625

COPYRIGHT (C) WRIGHT ENGINEERS. USE OF THIS DRAWING AND ANY REPRODUCTIONS SHALL BE RESTRICTED TO THE ORIGINAL SITE FOR WHICH IT WAS PREPARED. REPRODUCTION OR RE-USE OF THIS DRAWING FOR ANY OTHER PURPOSE IS STRICTLY PROHIBITED.

NUMBER	DATE	DESCRIPTION
1	09-21-2023	PLAN CHECK REVISIONS

DATE: May 25, 2023
DESIGN BY: RO
PROJECT MGR: RO
PROJECT NO: 220376

ROOF FRAMING DETAILS

S5.2

S52-220376-D

1. COLUMN PER FOUNDATION PLAN
2. STEEL BEAM PER 3rd FLOOR FRAMING PLAN
3. SEE ROOF FRAMING PLAN FOR TOP OF COLUMN ATTACHMENT

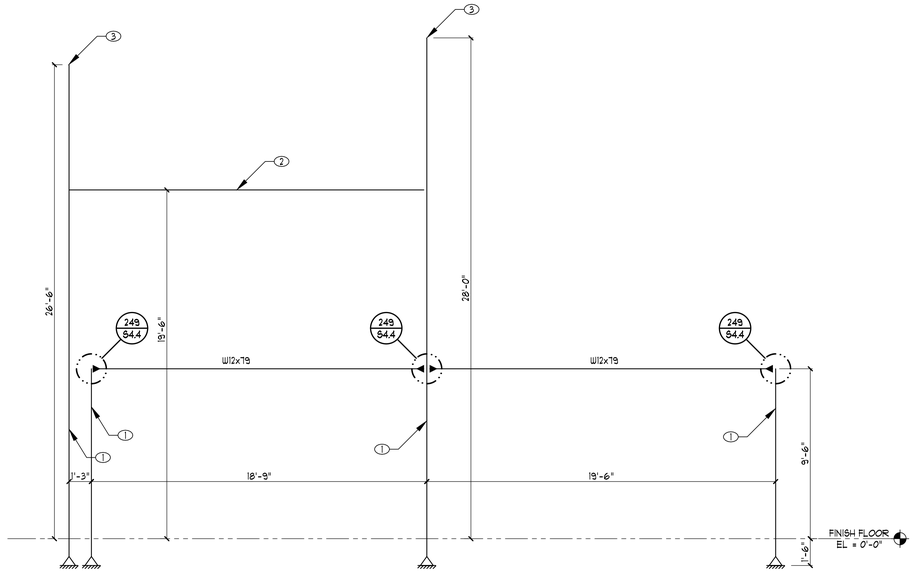

401 ORDINARY MOMENT FRAME ELEVATION

401-220376

NO SCALE

1. HSS5x5x3/8 BEAM
2. HSS5x5x1/2 COLUMN

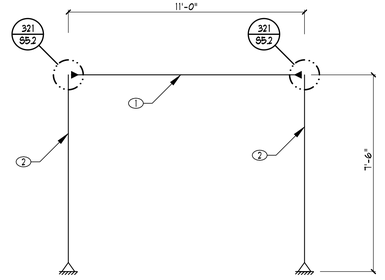

402 ORDINARY MOMENT FRAME ELEVATION

402-220376

NO SCALE

WRIGHT
STRUCTURAL ENGINEERS
ENGINEERED IN THE USA
2 Venture, Suite 200
Irvine, CA 92618
(949) 727-4001
CA@wrightengineers.com
wrightengineers.com
Las Vegas | Orange County | Phoenix | Salt Lake City | Dallas

LICENSED STRUCTURAL ENGINEER
ALLEN
No.S5460
STATE OF CALIFORNIA
9/21/2023

HELIOTROPE DUPLEX
407 Heliotrope Ave.
Corona Del Mar, CA 92625

COPYRIGHT (C) WRIGHT ENGINEERS, USE OF THIS DRAWING AND ANY REPRODUCTIONS SHALL BE RESTRICTED TO THE ORIGINAL SITE FOR WHICH IT WAS PREPARED. REPRODUCTION OR RE-USE OF THIS DRAWING FOR ANY OTHER PURPOSE IS STRICTLY PROHIBITED.

NUMBER	DATE	DESCRIPTION
1	09-21-2023	PLAN CHECK REVISIONS

DATE: May 25, 2023
DESIGN BY: RO
PROJECT MGR: RO
PROJECT NO: 220376

MOMENT FRAME ELEVATIONS

S6.1

S61-220376-D

p1.0

schematic plumbing plans
1/4"=1'-0"

heliotrope duplex

407 heliotrope avenue
corona del mar, california
92625

appliance schedule

APPLIANCE NUMBER	APPLIANCE NAME	APPLIANCE MANUFACTURER	APPLIANCE MODEL #	APPLIANCE HEIGHT	APPLIANCE WIDTH	APPLIANCE DEPTH	POWER SOURCE	FINISH MATERIAL	MOUNTING HEIGHT	COMMENTS
01	FRIDGE/FREEZER	SUB-ZERO	DET3650OID	84"	36"	24"	120V	ST. STL.	FLOOR	PANEL READY BUILT-IN 36" REFRIGERATOR/FREEZER W/ ICE MAKER
02	FRIDGE/FREEZER	SUB-ZERO	DET3650R	84"	36"	24"	120V	ST. STL.	FLOOR	PANEL READY BUILT-IN 36" REFRIGERATOR/FREEZER
03	RANGE	VIKING	VDR74826GSS	35-7/8"	47-7/8"	24"	GAS/ELEC	ST. STL.	FLOOR	48" DUAL FUEL RANGE
04	VENTILATION HOOD	VIKING	VWH548481SS	18"	48"	24"	120V	ST. STL.	+72" A.F.F.	VENT TO EXTERIOR PER MFR.'S SPECS; 1,200 C.F.M. UNIT
05	MICROWAVE	VIKING	VMOC	14-7/8"	24-5/8"	19"	120V	ST. STL.	+52" A.F.F.	BUILT-IN CONVECTION MICROWAVE OVEN
06	COFFEE MAKER	MIELE	CVA 6805	17-7/8"	23-1/2"	19-5/8"	120V	ST. STL.	+36" A.F.F.	BUILT-IN COFFEE MAKER
07	DISHWASHER	BOSCH	SHX68R55UC	34-1/16"	23-9/16"	22-7/16"	120V	ST. STL.	FLOOR	QTY. 2
08	GARBAGE DISPOSAL	IN-SINK-ERATOR	ESSENTIAL	12 5/8"	8 3/4"	8 3/4"	120V	–	UNDER SINK	EVOLUTION SERIES, 3/4 H.P.; PROVIDE SWITCHED POWER AT ISLAND
09	WATER HEATER	A.O. SMITH	HPSI050H45DV2xx	63"	22"	22"	240V	–	FLOOR	50 GALLON HYBRID ELECTRIC W.H.; PROVIDE RECIRCULATING PUMP; QTY. 2
10	WASHING MACHINE	–	–	–	–	–	120V	–	FLOOR	FRONT LOADING, TO BE PROVIDED BY OWNER
11	DRYER	–	–	–	–	–	240V/GAS	–	FLOOR	TO BE PROVIDED BY OWNER
12	REVERSE OSMOSIS	–	–	–	–	–	–	–	IN CABINET	LOCATE UNDER SINK; CONNECT TO DISPENSER AT SINK & REFRIGERATOR; OWNER TO APPROVE SYSTEM; PROVIDE ALLOWANCE
13	FURNACE	–	–	–	–	–	240V	–	2nd FLOOR	96% EFFICIENT UNIT (2 UNITS PER DUPLEX; ZONED PER MECH. SUB-CONTRACTOR) EXACT MODEL/TYPE TO BE DETERMINED BY MECH. CONTRACTOR; PROVIDE CODE REQUIRED ACCESS AND CLEARANCES; PROVIDE AIR CONDITIONING WITH CONDENSORS AT ROOF MECHANICAL WELL AND AT GRADE; A/C SYSTEM SHALL HAVE SEER 14 AND EER 12
14	HOUSE VENTILATION	BROAN	ERVS100S-HW	9.125"	22"	20"	120V	–	3rd FLOOR	6" DUCTS; MAX. SOUND RATING OF 1.5 SONE; 110 C.F.M. UNIT; 1 AT EACH UNIT
15	FIREPLACE	HEAT-N-GLO	MEZZO 60	47-3/4"	70"	18-5/8"	GAS	–	+0"	"MEZZO 60" GAS F.P. W/ CLEAN FACE TRIM; CUSTOM FIREPLACE SURROUND
16	FIREPLACE	HEAT-N-GLO	COURTYARD 42"	44"	47-7/8"	18-1/8"	GAS	–	+6"	EXTERIOR VENTLESS GAS FIREPLACE W/ SECURED LOG SET SECURED TO BASE
17	FIREPLACE	ISOKERN	VENT-FREE 36	37-1/2"	43"	25-1/4"	GAS	–	+18"	EXTERIOR FIREPLACE WITH SECURED VENT-FREE LOG SET SECURED TO BASE
18	BEVERAGE FRIDGE	VIKING	VRUO	35-1/8"	23-3/4"	24"	120V	ST. STL.	FLOOR	BUILT-IN UNDERCOUNTER WINE REFRIGERATOR; QTY. 4
19	FRIDGE/FREEZER	SUB-ZERO	CL3650UFDID	84"	36"	24"	120V	ST. STL.	FLOOR	PANEL READY BUILT-IN 36" REFRIGERATOR/FREEZER W/ ICE MAKER
20	RANGE	VIKING	VDR536	29-7/8"	35-7/8"	24"	GAS/ELEC	ST. STL.	FLOOR	36" DUAL FUEL RANGE
21	VENTILATION HOOD	VIKING	VWH3610SS	10"	36"	24"	120V	ST. STL.	+72" A.F.F.	VENT TO EXTERIOR PER MFR.'S SPECS; 1,200 C.F.M. UNIT
22	BBQ	–	–	–	36"	–	GAS	ST. STL.	+36"	PROVIDE $4,500 ALLOWANCE FOR 36" WIDE BBQ

plumbing schedule

FIXTURE NUMBER	FIXTURE NAME	FIXTURE MANUFACTURER	FIXTURE MODEL #	FIXTURE FINISH	DESCRIPTION	COMMENTS
01	KITCHEN SINK	KOHLER	K-6488-0	WHITE CAST IRON	SINGLE BOWL, FARMHOUSE SINK	"WHITEHAVEN" UNDERMOUNT, APRON-FRONT 36" SINK
02	KITCHEN SINK FAUCET	OWNER TO SELECT	–	–	.	PROVIDE $1,000 ALLOWANCE FOR KITCHEN FAUCET
03	INSTANT WATER HEATER	TO BE SELECTED	–	.	HEAT TANK AT KITCHEN SINK	.
04	HOT WATER FAUCET	WATERSTONE	FULTON	MATTE BLACK	.	.
05	TOILET	KOHLER	K-5310	WHITE	2-PIECE ELONGATED 1.28 G.P.F.	CIMARRON ELONGATED TOILET WITH SKIRTED TRAPWAY
06	TOILET (MASTER BATHROOM)	KOHLER	K-5401-PA	WHITE	"VEIL" INTELLIGENT 1-PIECE ELONGATED 1.19 G.P.F.	COMFORT HEIGHT ELONGATED INTELLIGENT TOILET
07	LAVATORY SINK	KOHLER	K-2000-0	VITREOUS CHINA	UNDERMOUNT SINK	"CAXTON" RECTANGLE UNDERMOUNT SINK
08	FAUCET	OWNER TO SELECT	–	OWNER TO SELECT	–	OWNER TO SELECT FAUCET; PROVIDE $350 ALLOWANCE EACH
09	SHOWER HEAD + CONTROLS	TO BE SELECTED	–	OWNER TO SELECT	.	OWNER TO SELECT HEAD + HANDLE; PROVIDE $750 ALLOWANCE
10	SHOWER HEAD/TUB FILLER	TO BE SELECTED	–	OWNER TO SELECT	.	OWNER TO SELECT HEAD + HANDLE; PROVIDE $750 ALLOWANCE
11	BATH	KOHLER	K-1949-GHRA-0	WHITE	"ARCHER" 66" x 32"	66" ALCOVE TUB WITH APRON AND BUBBLE MASSAGE
12	BATHTUB	OWNER TO SELECT	–	WHITE	–	6'-0" FREE STANDING TUB; OWNER TO SELECT; PROVIDE $3,000 ALLOWANCE
13	TUB FILLER	TO BE SELECTED	–	–	.	OWNER TO SELECT FLOOR MOUNTED TUB FILLER; PROVIDE $1,000 ALLOWANCE
14	KITCHEN SINK (UNIT 'B')	KOHLER	K-6487-0	WHITE CAST IRON	SINGLE BOWL, FARMHOUSE SINK	"WHITEHAVEN" UNDERMOUNT, APRON-FRONT 30" SINK
15	LAUNDRY SINK	KOHLER	K-19022-2-0	ENAMELED CAST IRON	UNDERMOUNT LAUNDRY SINK	"PARK FALLS" UNDERMOUNT SINK, WHITE
16	RAIN SHOWER HEAD	TO BE SELECTED	–	–	–	PROVIDE $1,000 ALLOWANCE
17	LINEAR SHOWER DRAIN	LUXE (OR APPROVED EQ.)	–	–	–	LINEAR, RECESSED SHOWER DRAIN WITH TILE INSERT
18						

1 whole house ventilation unit 'A'

*LOCATED AT 3rd FLOOR, WITHIN SLOPED ROOF AREA

WHOLE HOUSE VENTILATION SUMMARY:
(SEE SHEET P1.0 FOR EQUIPMENT SPECIFICATION)
1 C.F.M. PER 100 S.F.
2,741 S.F./100 = 27 C.F.M.
7.5 C.F.M. PER OCCUPANTS (1 OCCUPANT PER BEDROOM + 1)
4 OCCUPANTS x 7.5 = 30 C.F.M.
27 + 30 = 57 C.F.M. REQUIRED
**TITLE 24 REPORT REQUIRES 106 C.F.M.
WHOLE HOUSE VENTILATION UNIT PROVIDES UP TO 110 C.F.M.
110 C.F.M. (UNIT) > 106 C.F.M. (REQUIRED) = O.K.

unit 'B'

*LOCATED AT 3rd FLOOR, WITHIN THICKENED GUARDRAIL WALL

WHOLE HOUSE VENTILATION SUMMARY:
(SEE SHEET P1.0 FOR EQUIPMENT SPECIFICATION)
1 C.F.M. PER 100 S.F.
1,737 S.F./100 = 17 C.F.M.
7.5 C.F.M. PER OCCUPANTS (1 OCCUPANT PER BEDROOM + 1)
4 OCCUPANTS x 7.5 = 30 C.F.M.
17 + 30 = 47 C.F.M. REQUIRED
**TITLE 24 REPORT REQUIRES 79 C.F.M.
WHOLE HOUSE VENTILATION UNIT PROVIDES UP TO 110 C.F.M.
110 C.F.M. (UNIT) > 79 C.F.M. (REQUIRED) = O.K.

plumbing general notes

1. THESE SCHEMATIC PLUMBING PLANS DIAGRAM GENERAL SCOPE OF PLUMBING DRAWINGS. ENGINEERED PLUMBING DRAWINGS, DETAILING EXACT SIZE, SCOPE AND LAYOUT OF THE SYSTEM SHALL BE COMPLETED AND SUBMITTED UNDER SEPARATE PERMIT BY THE CONTRACTOR.

2. WATER SERVICE AND GAS CURRENTLY EXIST AT THIS SITE. CONTRACTOR TO DETERMINE IF EITHER SERVICE NEEDS TO BE UPGRADED. CONTRACTOR TO DETERMINE EXACT SIZE OF NEW SERVICES.

3. CONTRACTOR TO TIE INTO EXISTING CITY SEWER SYSTEM; PROVIDE NEW SEWER LATERAL AND CITY STANDARD CLEAN-OUT OUTSIDE OF THE PROPERTY LINES.

4. ALL PLUMBING IS TO BE CONCEALED WITHIN PLENUMS, DROPPED CEILINGS, WALL CAVITIES, CHASES OR UNDERGROUND.

5. INSULATE ALL HOT WATER PIPES PER TITLE 24 PIPING STANDARDS

6. ALL PLUMBING FIXTURES TO COMPLY WITH MANDATORY INDOOR WATER USE REQUIREMENTS OF CALGREEN (SECTIONS 4.303.1, 4.303.2, 4.303.3, ETC.)

7. ALL NEW TOILETS SHALL HAVE A MAXIMUM 1.28 GALLON/FLUSH; SHOWER HEADS SHALL HAVE A MAXIMUM OF 2.5 G.P.M.; AND FAUCETS TO HAVE A MAXIMUM FLOW OF 2.2 G.P.M. PER C.P.C. 402

8. APPLIANCES AT GARAGE NEED TO BE INSTALLED SO THAT ELEMENTS THAT GLOW, SPARK, OR FLAME ARE 18" ABOVE GARAGE FLOOR; PROVIDE FOR VEHICULAR PROTECTION AS NECESSARY

9. AIR CONDITIONING CONDENSERS SHALL BE LOCATED AT THE SIDE YARD, PER THE FLOOR PLAN ON SHEET A1.0

10. REFERENCE SHEET A0.4 FOR CAL GREEN RESIDENTIAL MANDATORY MEASURES FOR ALL PLUMBING FIXTURES.

fireplace notes:

FIREPLACE NOTES:
- FACTORY-BUILT FIREPLACE, CHIMNEYS AND ALL OF THEIR COMPONENTS SHALL BE LISTED AND INSTALLED IN ACCORDANCE WITH THEIR LISTING AND MANUFACTURER'S INSTALLATION INSTRUCTIONS.
- DECORATIVE SHROUDS SHALL NOT BE INSTALLED AT THE TERMINATION OF FACTORY-BUILT CHIMNEYS EXCEPT WHERE SUCH SHROUDS ARE LISTED AND LABELED FOR USE WITH THE SPECIFIC FACTORY-BUILT CHIMNEY SYSTEM AND ARE INSTALLED IN ACCORDANCE WITH MANUFACTURER'S INSTALLATION INSTRUCTIONS.
- PROVIDE PERMANENTLY ANCHORED GASEOUS FUEL BURNING PAN TO FIREBOX OF A SOLID FUEL BURNING FIREPLACE.
-SOLID FUEL BURNING FIREPLACE MUST COMPLY WITH THE CALIFORNIA ENERGY STANDARDS MANDATORY MEASURES.
-CHIMNEY SHALL EXTEND AT LEAST 2 FT. HIGHER THAN ANY PORTION OF THE BUILDING WITHIN 10 FT., BUT SHALL NOT BE LESS THAN 3 FT. ABOVE THE HIGHEST POINT WHERE THE CHIMNEY PASSES THROUGH THE ROOF.
-THE CONTRACTOR IS TO SUBMIT TO THE BUILDING INSPECTOR COPIES OF MANUFACTURER'S INSTALLATION INSTRUCTIONS FOR ALL PROPOSED FIREPLACES. THE COVER PAGE OF THE MANUFACTURER'S INSTALLATION INSTRUCTIONS FOR EACH FIREPLACE IS TO INCLUDE THE LOGO OF THE ANSI-ACCREDITED LISTING AGENCY PROVIDING LISTING SERVICES FOR THE FIREPLACE, E.G. UL, WARNOCK HERSEY-INTEREL, PFS, OMNI-TEST LABORATORIES, ETC.

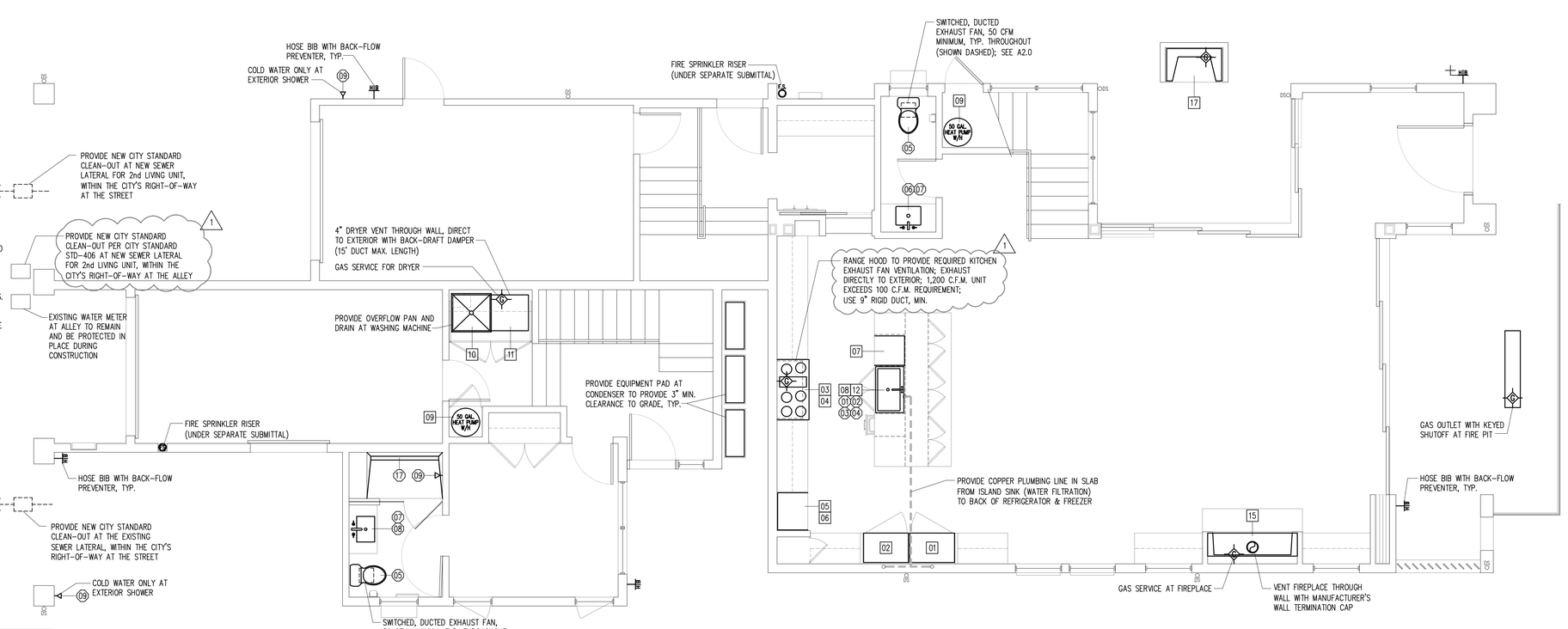

1 1st floor schematic plumbing plan

P1.0 SCALE: 1/4" = 1'-0"

**EACH UNIT TO BE SERVICED BY SEPARATE WATER SERVICE + SEWER

1 CITY CORRECTIONS 16 OCTOBER 2023

LICENSED ARCHITECT
ERIC D. AUST
C-29374
31 MAY 2025
RENEWAL DATE
STATE OF CALIFORNIA

0 1' 2' 4' 8' north

22 may 2023
© copyright 2023
job #2117

eric aust architect
62 balboa coves
newport beach, california 92663
tel 949.637.5220

client:
JRC real estate development
14930 alondra blvd.
la mirada, california 90638
tel 562.623.9328

p1.1

schematic plumbing plans
1/4"=1'-0"

heliotrope duplex

407 heliotrope avenue
corona del mar, california
92625

plumbing general notes

1. THESE SCHEMATIC PLUMBING PLANS DIAGRAM GENERAL SCOPE OF PLUMBING DRAWINGS. ENGINEERED PLUMBING DRAWINGS, DETAILING EXACT SIZE, SCOPE AND LAYOUT OF THE SYSTEM SHALL BE COMPLETED AND SUBMITTED UNDER SEPARATE PERMIT BY THE CONTRACTOR.

2. WATER SERVICE AND GAS CURRENTLY EXIST AT THIS SITE. CONTRACTOR TO DETERMINE IF EITHER SERVICE NEEDS TO BE UPGRADED. CONTRACTOR TO DETERMINE EXACT SIZE OF NEW SERVICES.

3. CONTRACTOR TO TIE INTO EXISTING CITY SEWER SYSTEM; PROVIDE NEW SEWER LATERAL AND CITY STANDARD CLEAN-OUT OUTSIDE OF THE PROPERTY LINES.

4. ALL PLUMBING IS TO BE CONCEALED WITHIN PLENUMS, DROPPED CEILINGS, WALL CAVITIES, CHASES OR UNDERGROUND.

5. INSULATE ALL HOT WATER PIPES PER TITLE 24 PIPING STANDARDS

6. ALL PLUMBING FIXTURES TO COMPLY WITH MANDATORY INDOOR WATER USE REQUIREMENTS OF CALGREEN (SECTIONS 4.303.1, 4.303.2, 4.303.3, ETC.)

7. ALL NEW TOILETS SHALL HAVE A MAXIMUM 1.28 GALLON/FLUSH; SHOWER HEADS SHALL HAVE A MAXIMUM OF 2.5 G.P.M.; AND FAUCETS TO HAVE A MAXIMUM FLOW OF 2.2 G.P.M. PER C.P.C. 402

8. APPLIANCES AT GARAGE NEED TO BE INSTALLED SO THAT ELEMENTS THAT GLOW, SPARK, OR FLAME ARE 18" ABOVE GARAGE FLOOR; PROVIDE FOR VEHICULAR PROTECTION AS NECESSARY

9. AIR CONDITIONING CONDENSERS SHALL BE LOCATED AT THE SIDE YARD, PER THE FLOOR PLAN ON SHEET A1.0

10. REFERENCE SHEET A0.4 FOR CAL GREEN RESIDENTIAL MANDATORY MEASURES FOR ALL PLUMBING FIXTURES.

**SEE SHEET P1.0 FOR APPLIANCES AND PLUMBING FIXTURE SPEICIFICATIONS

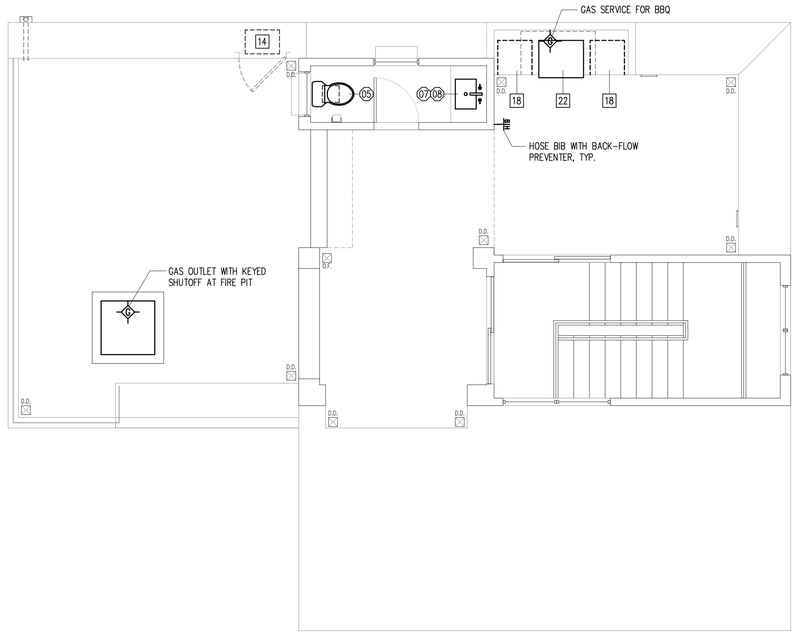

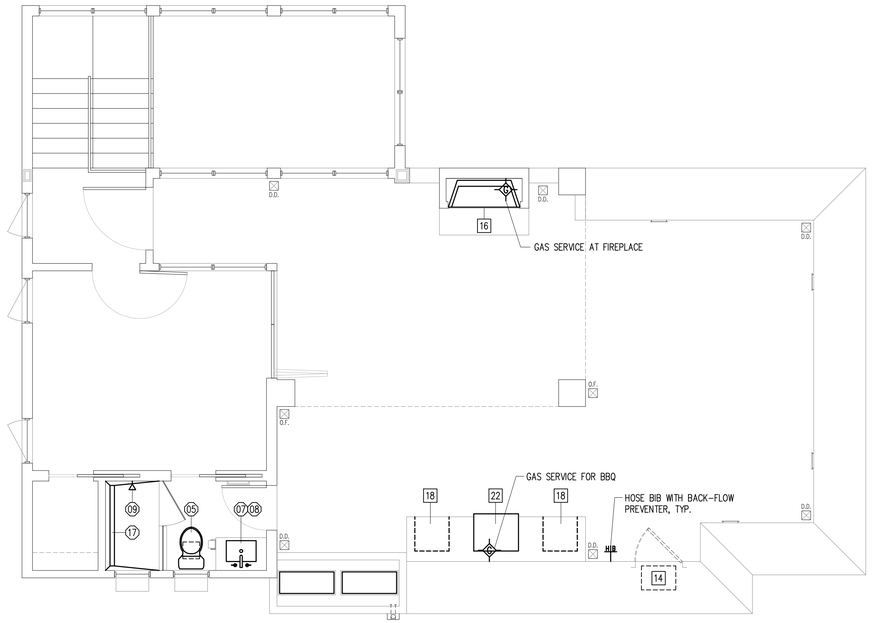

3 3rd floor schematic plumbing plan
P1.1 SCALE: 1/4" = 1'-0"

**EACH UNIT TO BE SERVICED BY SEPARATE WATER SERVICE + SEWER

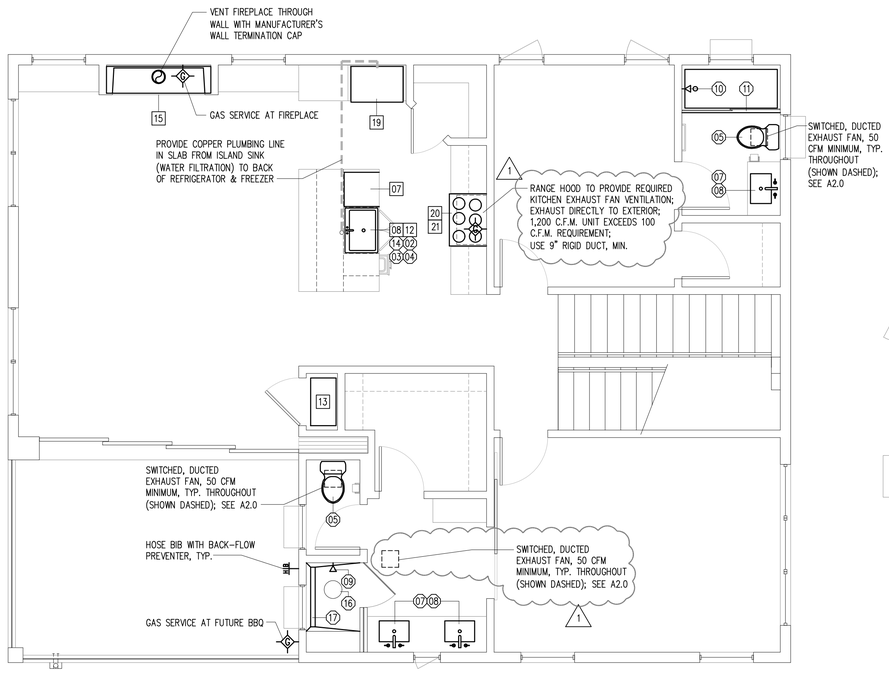

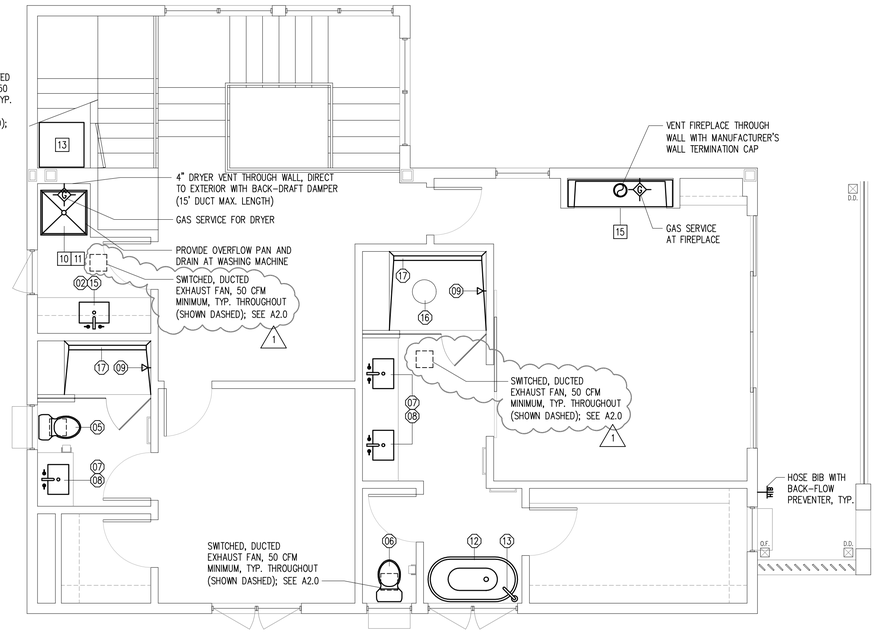

2 2nd floor schematic plumbing plan
P1.1 SCALE: 1/4" = 1'-0"

1 CITY CORRECTIONS 16 OCTOBER 2023

LICENSED ARCHITECT
ERIC D. AUST
C-29374
31 MAY 2025
RENEWAL DATE
STATE OF CALIFORNIA

0 1' 2' 4' 8' north

22 may 2023
© copyright 2023
job #2117

eric aust architect
62 balboa coves
newport beach, california 92663
tel 949.637.5220

client:
JRC real estate development
14930 alondra blvd.
la mirada, california 90638
tel 562.623.9328

electrical general notes

1. THESE SCHEMATIC ELECTRICAL LAYOUT PLANS DIAGRAM GENERAL SCOPE OF ELECTRICAL DRAWINGS. ENGINEERED ELECTRICAL DRAWINGS, DETAILING EXACT SIZE, SCOPE AND LAYOUT OF THE SYSTEM WILL BE COMPLETED AND SUBMITTED UNDER SEPARATE PERMIT BY CONTRACTOR.

2. CONTRACTOR TO DETERMINE ELECTRICAL SERVICE AND PANEL SIZE BASED ON OVERALL LOADS; TO BE DETERMINED BY ELECTRICAL CONTRACTOR AND SUBMITTED UNDER SEPARATE, ELECTRICAL PAERMIT.

3. ALL CONDUIT IS TO BE CONCEALED WITHIN PLENUMS, DROPPED CEILINGS, WALL CAVITIES OR CHASES.

4. SMOKE DETECTORS TO BE HARD WIRED WITH BATTERY BACK-UP. ALL DETECTORS SHALL BE INTERCONNECTED SUCH THAT THE ACTUATION OF ONE ALARM WILL ACTUATE ALL ALARMS.

5. ALL SWITCHES TO BE LUTRON "MAESTRO" DIMMER, OR SIMILAR

6. PROVIDE UFER GROUND OR OTHER APPROVED GROUND

7. ALL BRANCH CIRCUITS THAT SUPPLY 125 VOLT, SINGLE PHASE, 15 OR 20 AMPERE OUTLETS INSTALLED IN DWELLING UNIT BEDROOMS, FAMILY ROOM, DINING ROOM, LIVING ROOM, PLAYROOMS, OFFICES, HALLWAYS, DENS OR SIMILAR ROOMS SHALL BE PROTECTED BY AN ARC-FAULT CIRCUIT INTERRUPTER

8. ELECTRICAL CONTRACTOR TO PROVIDE A SINGLE LINE DIAGRAM, PANEL SCHEDULES AND LOAD CALCULATIONS FOR THE ELECTRICAL SYSTEMS TO THE CITY ELECTRICAL INSPECTOR

9. ELECTRICAL OUTLETS, LIGHTING AND SMOKE DETECTORS IN BEDROOMS ARE TO BE ON ARC_FAULT CIRCUIT INTERRUPTER

10. LIGHTING WITHIN BATHROOMS TO BE FLUORESCENT OR OTHER HIGH EFFICIENCY LIGHTING

11. ALL EXTERIOR LIGHTS THAT ARE MOUNTED TO THE BUILDING SHALL BE CONTROLLED BY PHOTO CONTROL/MOTION SENSOR COMBINATION

12. ALL 125-VOLT, 15 AND 20 AMPERE RECEPTACLE OUTLETS SHALL BE LISTED TAMPER-RESISTANT RECEPTACLES PER C.E.C. 406.11

13. ELECTRICAL SUB PANELS ARE NOT PERMITTED WITHIN CLOSETS, BATHROOMS, AND PANTRIES

14. THESE PLANS ARE FOR REFERENCE ONLY. ALL ELECTRICAL OUTLETS AND GFIC OUTLETS ARE TO BE LOCATED AND INSTALLED PER ARTICLES 210.52 AND 210.8 OF THE CALIFORNIA ELECTRICAL CODE

15. ALL LIGHTING MEASURES SHALL COMPLY WITH 2019 LOW-RISE RESIDENTIAL MANDATORY MEASURES PER SHEET A0.4

16. PROVIDE ALLOWANCE FOR LUTRON HOME AUTOMATION THROUGH ENTIRE HOUSE

17. ELECTRICAL RECEPTACLE OUTLETS, SWITCHES AND CONTROLS SHALL BE LOCATED NO MORE THAN 48" MEASURED FROM THE TOP OF THE OUTLET BOX AND NOT LESS THAN 15" MEASURED FROM THE BOTTOM OF THE OUTLET BOX ABOVE THE FINISH FLOOR

18. PROVIDE AUTO-OFF CONTROLS FOR ALL LIGHTING IN DRAWERS AND CABINETS

19. UNDERSHELF, DISPLAY CABINETS, SWITCHED OUTLETS SHALL BE CONTROLLED SEPARATE FROM CEILING LIGHTTING CONTROLS

20. LIGHTING IN HABITABLE SPACES SHALL HAVE ACCESSIBLE WALL-MOUNTED DIMMING CONTROLS

electrical legend

SYMBOL	NAME
	DUPLEX OUTLET
X	EXISTING DUPLEX OUTLET
	4-PLEX OUTLET
	1/2 SWITCHED OUTLET
GFI	GROUNDED DUPLEX OUTLET
	220V OUTLET
	WIRING PATH WALL SWITCH (MAESTRO DIMMERS)
3	3-WAY WALL SWITCH (MAESTRO DIMMERS)
V	LUTRON "MAESTRO" VACANCY SENSOR (AT BATHROOMS)
	TELEPHONE JACK
C	CABLE TELEVISION OUTLET (UPGRADE AS REQUIRED)
T	"NEST" LEARNING THERMOSTAT; 2nd GENERATION MODEL

ceiling legend

SYMBOL	NAME
S	SMOKE DETECTOR (HARD WIRED W/ BATTERY BACK-UP)
C/S	CARBON MONOXIDE/ SMOKE COMBINATION DETECTOR (HARD WIRED W/ BATTERY BACK-UP)
	ELEMENT 3" SQUARE L.E.D. ADJUSTABLE DOWN LIGHT FLANGELESS BEVEL 40-DEGREE FLOOD MODEL EN3S-LO-927-A-A-I/EN3S-L-B-QS-W
	ELEMENT 3" SQUARE L.E.D. ADJUSTABLE DOWN LIGHT FLANGELESS BEVEL 65-DEGREE WIDE FLOOD MODEL EN3S-LO-927-A-A-I/EN3S-L-B-QS-W
	LUCIFER LIGHTING 'CYLINDER 2' FIXED SURFACE MOUNT WITH 60° LUMINAIRE; LAMP: 3000K 90+ CR; 926 LUMENS CY2-FB-1-WH-BK-90C15A-30-60
W	SHOWER GRADE, 4" LED RECESSED CAN LIGHT; LITHONIA L3LED T24
EXT.	EXTERIOR GRADE RECESSED CAN LIGHT; JUNO 4" L.E.D., MODEL #IC20LEDG3
J	J-BOX AT CEILING WITH SUSPENDED LIGHT FIXTURE TO BE SELECTED BY THE OWNER
F	SWITCHED, DUCTED EXHAUST FAN, 50 CFM MINIMUM; AUTOMATIC HUMIDITY SENSING UNIT AT MASTER BATH
	DMF LIGHTING 'DRD5S' 8" ROUND L.E.D. WHITE ROUNOD LUMINAIRE WITH ACRYLIS LENS
+60" PS	OUTDOOR SCONCE TO BE SELECTED BY OWNER; PROVIDE PHOTOCELL
+78"	WALL MOUNTED FIXTURE TO BE SELECTED BY OWNER
	UNDER CABINET L.E.D. STRIP LIGHT BY CORE; 3.0W/FT. HIGH FLUX
	WAC LIGHTING TRACK (RECESSED IN DRYWALL) WITH SERIES 104 FIXTURES
STEP	WALL MOUNTED RECESSED STEP/WALL FIXTURE; WAC L.E.D. 5" BLACK HORIZ.
WALL	LUCIFER "IMPACT" RECESSED WALL LIGHT ISL1-2-WH-80L02B-27
SP	CEILING MOUNTED EXTERIOR AUDIO SPEAKER FLUSH MOUNTED AT CEILING
SC	CEILING MOUNTED EXTERIOR SECURITY CAMERA

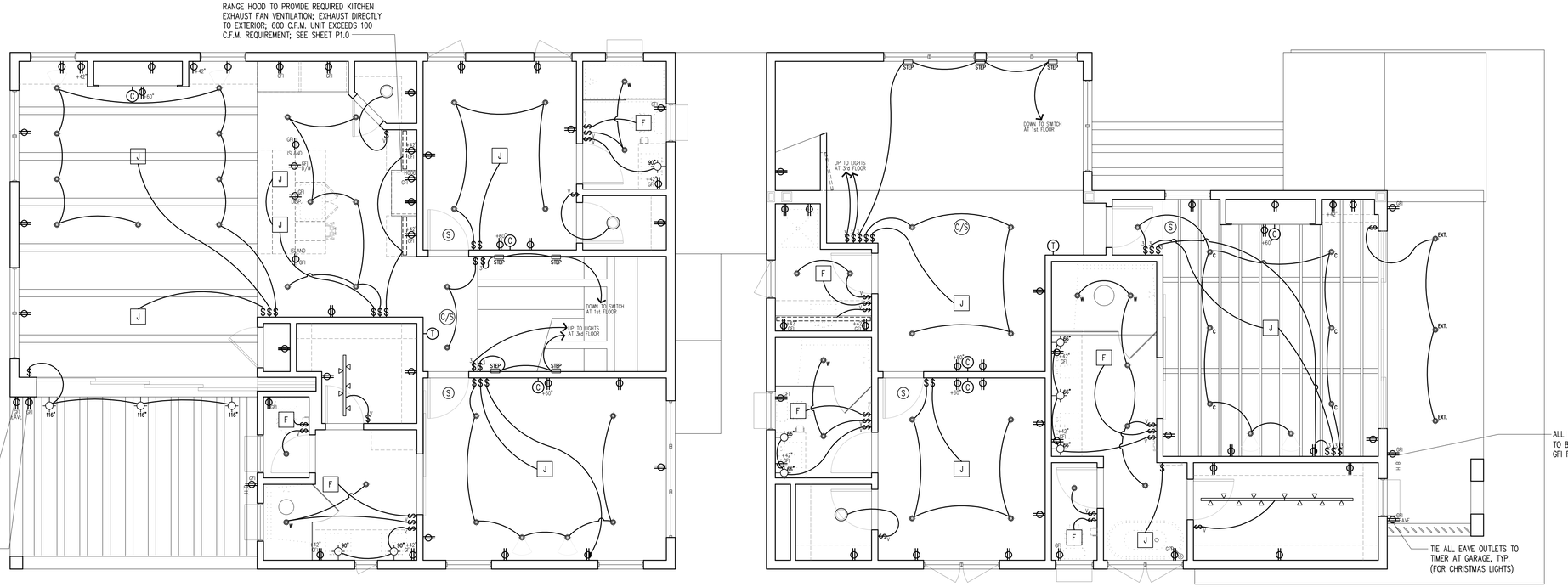

2 2nd floor schematic electrical plan

E1.0 SCALE: 1/4" = 1'-0"

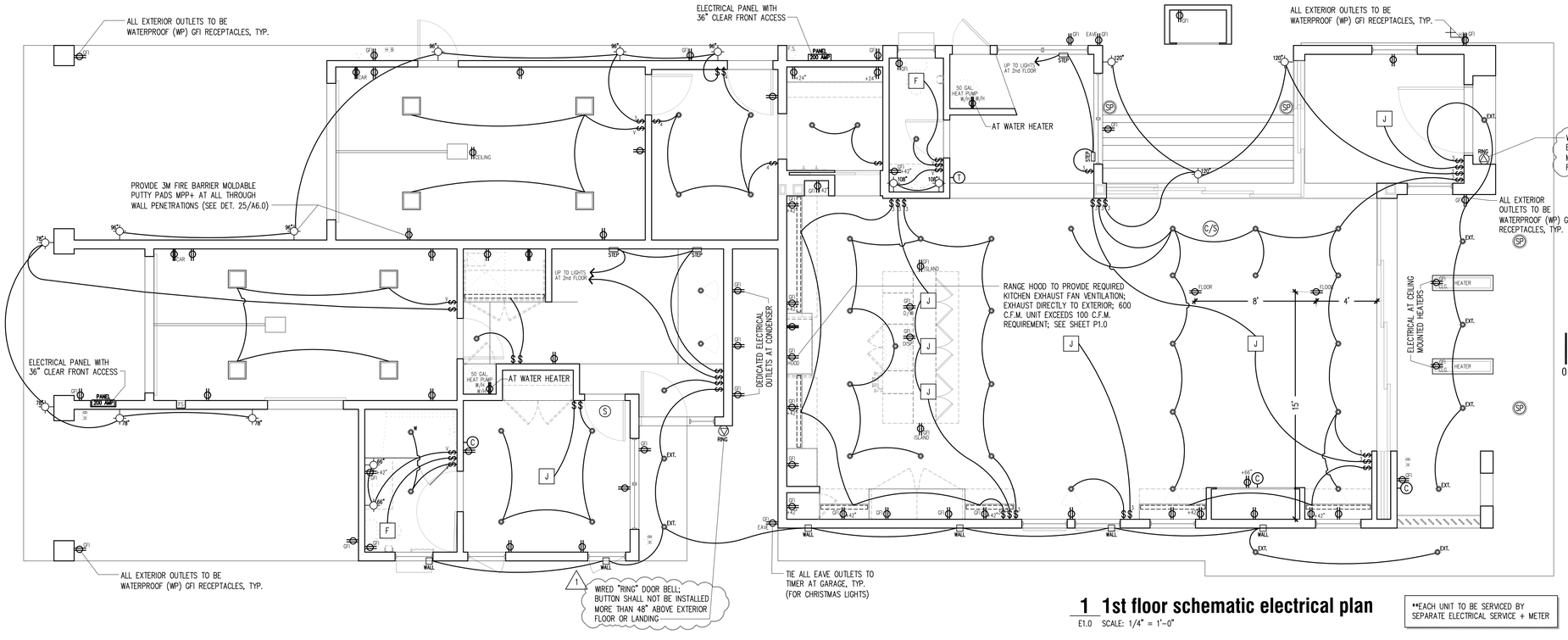

1 1st floor schematic electrical plan

E1.0 SCALE: 1/4" = 1'-0"

**EACH UNIT TO BE SERVICED BY SEPARATE ELECTRICAL SERVICE + METER

e1.0

1st + 2nd floor schematic electrical plans
1/4"=1'-0"

heliotrope duplex

407 heliotrope avenue
corona del mar, california
92625

LICENSED ARCHITECT
ERIC D. AUST
C-29374
31 MAY 2025
RENEWAL DATE
STATE OF CALIFORNIA

0 1' 2' 4' 8' north

22 may 2023
© copyright 2023
job #2117

eric aust
architect
62 balboa coves
newport beach, california 92663
tel 949.637.5220

client:
JRC real estate development
14930 alondra blvd.
la mirada, california 90638
tel 562.623.9328

electrical general notes

1. THESE SCHEMATIC ELECTRICAL LAYOUT PLANS DIAGRAM GENERAL SCOPE OF ELECTRICAL DRAWINGS. ENGINEERED ELECTRICAL DRAWINGS, DETAILING EXACT SIZE, SCOPE AND LAYOUT OF THE SYSTEM WILL BE COMPLETED AND SUBMITTED UNDER SEPARATE PERMIT BY CONTRACTOR.

2. CONTRACTOR TO DETERMINE ELECTRICAL SERVICE AND PANEL SIZE BASED ON OVERALL LOADS; TO BE DETERMINED BY ELECTRICAL CONTRACTOR AND SUBMITTED UNDER SEPARATE, ELECTRICAL PAERMIT.

3. ALL CONDUIT IS TO BE CONCEALED WITHIN PLENUMS, DROPPED CEILINGS, WALL CAVITIES OR CHASES.

4. SMOKE DETECTORS TO BE HARD WIRED WITH BATTERY BACK-UP. ALL DETECTORS SHALL BE INTERCONNECTED SUCH THAT THE ACTUATION OF ONE ALARM WILL ACTUATE ALL ALARMS.

5. ALL SWITCHES TO BE LUTRON "MAESTRO" DIMMER, OR SIMILAR

6. PROVIDE UFER GROUND OR OTHER APPROVED GROUND

7. ALL BRANCH CIRCUITS THAT SUPPLY 125 VOLT, SINGLE PHASE, 15 OR 20 AMPERE OUTLETS INSTALLED IN DWELLING UNIT BEDROOMS, FAMILY ROOM, DINING ROOM, LIVING ROOM, PLAYROOMS, OFFICES, HALLWAYS, DENS OR SIMILAR ROOMS SHALL BE PROTECTED BY AN ARC-FAULT CIRCUIT INTERRUPTER

8. ELECTRICAL CONTRACTOR TO PROVIDE A SINGLE LINE DIAGRAM, PANEL SCHEDULES AND LOAD CALCULATIONS FOR THE ELECTRICAL SYSTEMS TO THE CITY ELECTRICAL INSPECTOR

9. ELECTRICAL OUTLETS, LIGHTING AND SMOKE DETECTORS IN BEDROOMS ARE TO BE ON ARC_FAULT CIRCUIT INTERRUPTER

10. LIGHTING WITHIN BATHROOMS TO BE FLUORESCENT OR OTHER HIGH EFFICIENCY LIGHTING

11. ALL EXTERIOR LIGHTS THAT ARE MOUNTED TO THE BUILDING SHALL BE CONTROLLED BY PHOTO CONTROL/MOTION SENSOR COMBINATION

12. ALL 125-VOLT, 15 AND 20 AMPERE RECEPTACLE OUTLETS SHALL BE LISTED TAMPER-RESISTANT RECEPTACLES PER C.E.C. 406.11

13. ELECTRICAL SUB PANELS ARE NOT PERMITTED WITHIN CLOSETS, BATHROOMS, AND PANTRIES

14. THESE PLANS ARE FOR REFERENCE ONLY. ALL ELECTRICAL OUTLETS AND CFIC OUTLETS ARE TO BE LOCATED AND INSTALLED PER ARTICLES 210.52 AND 210.8 OF THE CALIFORNIA ELECTRICAL CODE

15. ALL LIGHTING MEASURES SHALL COMPLY WITH 2019 LOW-RISE RESIDENTIAL MANDATORY MEASURES PER SHEET A0.4

16. PROVIDE ALLOWANCE FOR LUTRON HOME AUTOMATION THROUGH ENTIRE HOUSE

17. ELECTRICAL RECEPTACLE OUTLETS, SWITCHES AND CONTROLS SHALL BE LOCATED NO MORE THAN 48" MEASURED FROM THE TOP OF THE OUTLET BOX AND NOT LESS THAN 15" MEASURED FROM THE BOTTOM OF THE OUTLET BOX ABOVE THE FINISH FLOOR

18. PROVIDE AUTO-OFF CONTROLS FOR ALL LIGHTING IN DRAWERS AND CABINETS

19. UNDERSHELF, DISPLAY CABINETS, SWITCHED OUTLETS SHALL BE CONTROLLED SEPARATE FROM CEILING LIGHTTING CONTROLS

20. LIGHTING IN HABITABLE SPACES SHALL HAVE ACCESSIBLE WALL-MOUNTED DIMMING CONTROLS

1

energy storage systems

AN ENERGY STORAGE SYSTEM SHALL BE PROVIDED AND SHALL MEET THE FOLLOWING REQUIREMENTS:

a. AT LEAST ONE OF THE FOLLOWING SHALL BE PROVIDED:
   i. ESS-READY INTERCONNECTION EQUIPMENT WITH A MINIMUM BACKED UP CAPACITY OF 60 AMPS AND A MINIMUM OF FOUR ESS-SUPPLIED BRANCH CIRCUITS
   ii. FOUR OF MORE BRANCH CIRCUITS FROM A SINGLE PANELBOARD SUITABLE TO BE SUPPLIED BY THE ESS; AT LEAST ONE CIRCUIT MUST SUPPLY THE REFRIGERATOR, LIGHTING CIRCUIT NEAR THE PRIMARY EGRESS, AND A SLEEPING ROOM RECEPTACLE OUTLET.
b. A MAIN PANEL BOARD WITH A MINIMUM BUSBAR RATING OF 225 AMPS
c. SUFFICIENT SPACE RESERVED TO ALLOW FUTURE INSTALLATION OF SYSTEM ISOLATION EQUIPMENT OR A TRANSFER SWITCH WITHIN 3 FT. OF THE MAIN PANELBBOARD

electric readiness requirements

NEW CONSTRUCTION SHALL COMPLY WITH THE FOLLOWING ELECTRIC READINESS REQUIREMENTS (CEnC SECTION 150.0(t)-(v)):

a. HEAT PUMP SPACE HEATER READY: IF NATURAL GAS OR PROPANE FURNACE IS INSTALLED IN LIEU OF THE ELECTRIC HEAT PUMP SPECIFIED, PROVIDE THE FOLLOWING:
   i. INSTALL DEDICATED 240-VOLT, 30 AMP BRANCH CIRCUIT WIRING WITHIN 3 FT. FROM THE FURNACE AND ACCESSIBLE TO THE FURNACE WITH NO OBSTRUCTIONS
   ii. RESERVE SPACE ON THE MAIN ELECTRICAL SERVICE PANEL TO ALLOW FOR THE INSTALLATION OF A DOUBLE POLE CIRCUIT BREAKER FOR FUTURE FURNACE INSTALLATION
b. ELECTRIC COOKTOP READY: IF A GAS OR PROPANCE COOKTOP SERVES THIS DWELLING UNIT AS SPECIFIED, INSTALL THE FOLLOWING:
   i. INSTALL DEDICATED 240-VOLT, 50 AMP BRANCH CIRCUIT WIRING WITHIN 3 FT. FROM THE COOKTOP AND ACCESSIBLE TO THE COOKTOP WITH NO OBSTRUCTIONS
   ii. RESERVE SPACE ON THE MAIN ELECTRICAL SERVICE PANEL TO ALLOW FOR THE INSTALLATION OF A DOUBLE POLE CIRCUIT BREAKER FOR FUTURE COOKTOP INSTALLATION
c. ELECTRIC CLOTHES DRYER READY: IF A CLOTHES DRYER LOCATION HAS GAS OR PROPANE PLUMBING, ADD THE FOLLOWING:
   i. INSTALL DEDICATED 240-VOLT, 30 AMP BRANCH CIRCUIT WIRING WITHIN 3 FT. FROM THE CLOTHES DRYER AND ACCESSIBLE TO THE CLOTHES DRYER WITH NO OBSTRUCTIONS
   ii. RESERVE SPACE ON THE MAIN ELECTRICAL SERVICE PANEL TO ALLOW FOR THE INSTALLATION OF A DOUBLE POLE CIRCUIT BREAKER FOR FUTURE CLOTHES DRYER INSTALLATION

electrical legend

SYMBOL	NAME
	DUPLEX OUTLET
X	EXISTING DUPLEX OUTLET
	4-PLEX OUTLET
	1/2 SWITCHED OUTLET
GFI	GROUNDED DUPLEX OUTLET
	220V OUTLET
	WIRING PATH WALL SWITCH (MAESTRO DIMMERS)
3	3-WAY WALL SWITCH (MAESTRO DIMMERS)
V	LUTRON "MAESTRO" VACANCY SENSOR (AT BATHROOMS)
	TELEPHONE JACK
C	CABLE TELEVISION OUTLET (UPGRADE AS REQUIRED)
T	"NEST" LEARNING THERMOSTAT; 2nd GENERATION MODEL

ceiling legend

SYMBOL	NAME
S	SMOKE DETECTOR (HARD WIRED W/ BATTERY BACK-UP)
C/S	CARBON MONOXIDE/ SMOKE COMBINATION DETECTOR (HARD WIRED W/ BATTERY BACK-UP)
	ELEMENT 3" SQUARE L.E.D. ADJUSTABLE DOWN LIGHT FLANGELESS BEVEL 40-DEGREE FLOOD MODEL EN3S-LO-927-A-A-I/EN3S-L-B-O-W
	ELEMENT 3" SQUARE L.E.D. ADJUSTABLE DOWN LIGHT FLANGELESS BEVEL 65-DEGREE WIDE FLOOD MODEL EN3S-LO-927-A-A-I/EN3S-L-B-O-W
C	LUCIFER LIGHTING "CYLINDER 2" FIXED SURFACE MOUNT WITH 60° LUMINAIRE; LAMP 3000K 90+ CR; 926 LUMENS CY2-FB-1-WH-BK-90C15A-30-60
W	SHOWER GRADE, 4" LED RECESSED CAN LIGHT; LITHONIA L3LED T24
EXT.	EXTERIOR GRADE RECESSED CAN LIGHT; JUNO 4" L.E.D., MODEL #JC20LEDG3
J	J-BOX AT CEILING WITH SUSPENDED LIGHT FIXTURE TO BE SELECTED BY THE OWNER
F	SWITCHED, DUCTED EXHAUST FAN, 50 CFM MINIMUM; AUTOMATIC HUMIDITY SENSING UNIT AT MASTER BATH
	DMF LIGHTING "DRD5S" 8" ROUND L.E.D. WHITE ROUNOD LUMINAIRE WITH ACRYLIS LENS
+60° PS	OUTDOOR SCONCE TO BE SELECTED BY OWNER; PROVIDE PHOTOCELL
+78°	WALL MOUNTED FIXTURE TO BE SELECTED BY OWNER
	UNDER CABINET L.E.D. STRIP LIGHT BY CORE; 3.0W/FT. HIGH FLUX
	WAC LIGHTING TRACK (RECESSED IN DRYWALL) WITH SERIES 104 FIXTURES
STEP	WALL MOUNTED RECESSED STEP/WALL FIXTURE; WAC L.E.D. 5" BLACK HORIZ.
WALL	LUCIFER "IMPACT" RECESSED WALL LIGHT ISL1-2-WH-810L02B-27
SP	CEILING MOUNTED EXTERIOR AUDIO SPEAKER FLUSH MOUNTED AT CEILING
SC	CEILING MOUNTED EXTERIOR SECURITY CAMERA

IC RATED FIXTURES

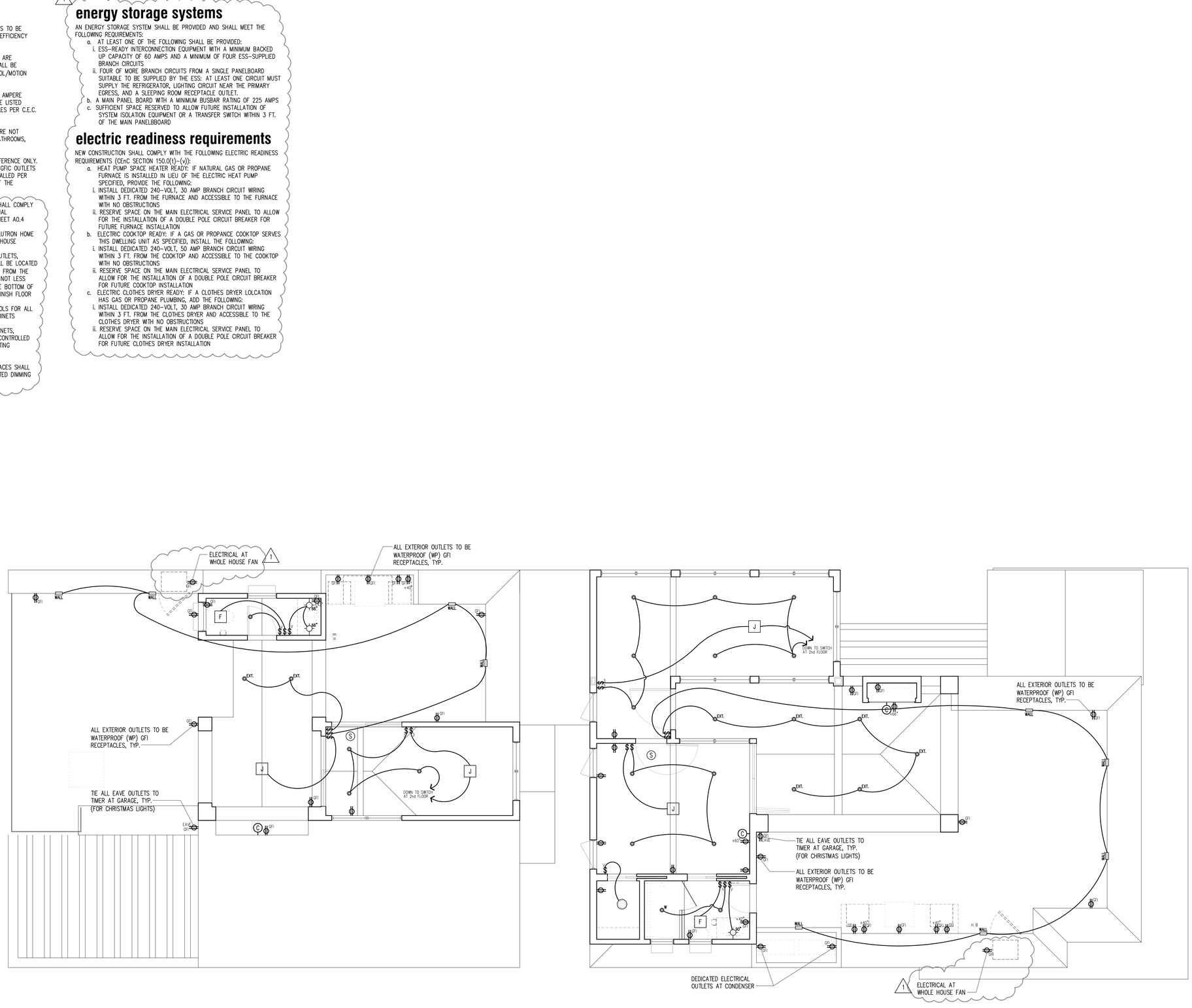

3 3rd floor schematic electrical plan

E1.1 SCALE: 1/4" = 1'-0"

**EACH UNIT TO BE SERVICED BY SEPARATE ELECTRICAL SERVICE + METER

e1.1

3rd floor schematic electrical plan
1/4"=1'-0"

heliotrope duplex

407 heliotrope avenue
corona del mar, california
92625

1 CITY CORRECTIONS 16 OCTOBER 2023

LICENSED ARCHITECT
ERIC D. AUST
C-29374
31 MAY 2025
RENEWAL DATE
STATE OF CALIFORNIA

0 1' 2' 4' 8' north

22 may 2023
© copyright 2023
job #2117

eric aust architect
62 balboa coves
newport beach, california 92663
tel 949.637.5220

client:
JRC real estate development
14930 alondra blvd.
la mirada, california 90638
tel 562.623.9328

landscape general notes

1. PLANTING SCHEDULE (1 WEEK)
2. 90% COVERAGE IN 90 DAYS; REPEAT AS NECESSARY
3. MAINTAIN PLANTS & REPLACE AS REQUIRED TO ENSURE CONTINUES COMPLIANCE WITH LANDSCAPE PLAN
4. ALL LIGHTING TO BE DOWNWARD, NOT IMPACTING ADJACENT WETLANDS
5. WATER SUPPLY FOR ALL LANDSCAPING SHALL BE PROVIDED BY EXISTING WATER SERVICE FROM CITY OF NEWPORT BEACH
6. ALL LANDSCAPE AREA SHALL HAVE SOIL WITH COMPOST RATE OF AT LEAST FOUR CUBIC YARDS PER 1,000 SQUARE FEET TO A DEPTH OF SIX INCHES (UNLESS CONTRA-INDICATED BY A SOIL TEST)
7. ALL PLANTS INDICATED ARE DROUGHT TOLERANT AND COMPLIANT WITH CALIFORNIA COASTAL COMMISSION REQUIREMENTS. IF SUBSTITUTES ARE PROPOSED, INSTALL CLIMATE ADAPTED PLANTS THAT REQUIRE OCCASIONAL, LITTLE OR NO SUMMER WATER (AVERAGE WUCOLS PLAN FACTOR 0.3) FOR 75% OF THE PLANT AREA EXCLUDING EDIBLES AND AREAS USING RECYCLED WATER.
8. A MINIMUM THREE INCH (3") LAYER OF MULCH SHALL BE APPLIED ON ALL EXPOSED SOIL SURFACES OF PLANTING AREAS EXCEPT IN TURF AREAS, CREEPING OR ROOTING GROUNDCOVERS, OR DIRECT SEEDING APPLICATIONS WHERE MULCH IS CONTRAINDICATED.
9. NO TURF TO BE INSTALLED AS PART OF THIS PROJECT.
10. IRRIGATION SYSTEM:
    a. AUTOMATIC IRRIGATION CONTROLLERS ARE REQUIRED AND MUST USE EVAPOTRANSPIRATION OR SOIL MOISTURE SENSOR DATA.
    b. IRRIGATION CONTROLLERS SHALL BE OF A TYPE WHICH DOES NOT LOSE PROGRAMMING DATA IN THE EVENT THE PRIMARY POWER SOURCE IS INTERRUPTED.
    c. PRESSURE REGULATORS SHALL BE INSTALLED ON THE IRRIGATION SYSTEM TO ENSURE THE DYNAMIC PRESSURE OF THE SYSTEM IS WITHIN THE MANUFACTURER'S RECOMMENDED PRESSURE RANGE.
    d. MANUAL SHUT-OFF VALVES (SUCH AS A GATE VALVE, BALL VALVE, OR BUTTERFLY VALVE) SHALL BE INSTALLED AS CLOSE AS POSSIBLE TO THE POINT OF CONNECTION OF THE WATER SUPPLY.
    e. ALL IRRIGATION EMISSION DEVICES MUST MEET THE REQUIREMENTS SET IN THE ANSI STANDARD, ASABE/ICC802-2014, "LANDSCAPE IRRIGATION SPRINKLER AND EMITTER STANDARD". ALL SPRINKLER HEADS INSTALLED IN THE LANDSCAPE MUST DOCUMENT A DISTRIBUTION UNIFORMITY LOW QUARTER OF 0.65 OR HIGHER USING THE PROTOCOL DEFINED IN ASABE/ICC 802-2014.
11. AT THE TIME OF FINAL INSPECTION, THE PERMIT APPLICANT MUST PROVIDE THE OWNER OF THE PROPERTY WITH A CERTIFICATE OF COMPLETION, CERTIFICATE OF INSTALLATION, IRRIGATION SCHEDULE AND A SCHEDULE OF LANDSCAPE AND IRRIGATION MAINTENANCE.

I AGREE TO COMPLY WITH REQUIREMENTS OF THE PRESCRIPTIVE COMPLIANCE OPTION TO THE MWELO

ERIC AUST

plant list

HYDRANGEA MACROPHYLLA 'BIG LEAF HYDRANGEA'	5 GAL.
FESTUCA GLAUCA 'BLUE FESCUE'	1 GAL.
MUHLENBERGIA RIGENS	1 GAL.
ISOTOMA FLUVIATILIS 'BLUE STAR CREEPER'	FLATS
MISCELLANEOUS SUCCULENTS (*SUCCULENTS TO HAVE 12" MAX. HEIGHT AT MATURITY)	FLATS

landscape irrigation notes

1. IRRITROL ELECTRIC ANTI-SIPHON 3/4" VALVE, TYP. (TIE INTO HOSE BIB)
2. IRRITROL RAIN DIAL IRRIGATION TIMER
3. RAINBIRD PRD-075-RBY 3/4" PRESSURE REGULATING FILTER
4. DRIP NETAFIM 12 TECHLINE 1/2" TUBING 0.9 G.P.H. WITH 12" SPACING
5. ALL DRIP FITTINGS TO BE NETAFIM (END CAPS, TEES AND ELBOWS, FLUSH VALVES, COUPLINGS, ADAPTERS, ETC.)
6. ====== INDICATES 3" P.V.C. SLEEVE UNDERNEATH CONCRETE SLAB ON GRADE TO PROVIDE ACCESS FOR IRRIGATION TUBING
7. PROVIDE VALVE BOX AT IRRIGATION VALVES
8. ALL P.V.C. PIPE AND FITTINGS TO BE SCHEDULE 40
9. ALL DRIP TUBING TO BE APPLIED TO PLANT DRIP LINES AND ROOT BALLS OF PLANTS

landscape area

235 S.F. TOTAL LANDSCAPED AREA
(ALL PLANT MATERIAL AREA; NO TURF)

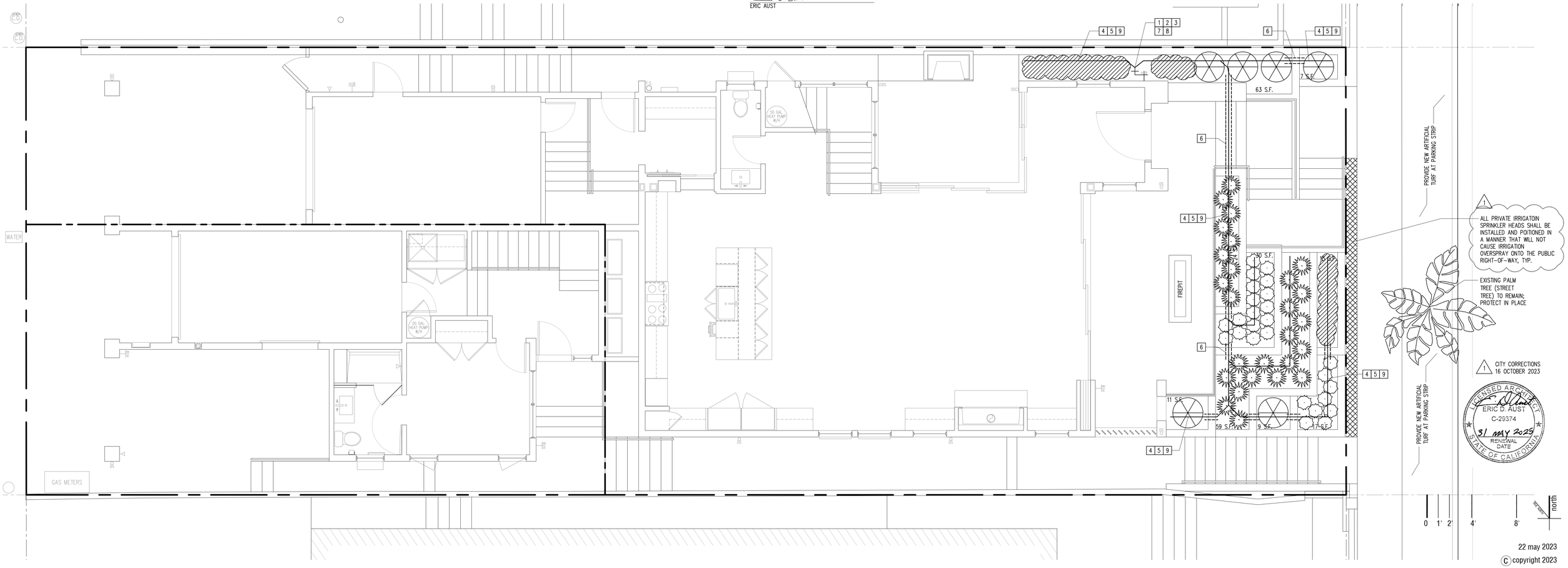

1 landscape / irrigation plan

L1.0 SCALE: 1/4" = 1'-0"

L1.0

landscape / irrigation plan
1/4"=1'-0"

heliotrope duplex

407 heliotrope avenue
corona del mar, california
92625

22 may 2023
© copyright 2023
job #2117

eric aust architect
62 balboa coves
newport beach, california 92663
tel 949.637.5220

client:
JRC real estate development
14930 alondra blvd.
la mirada, california 90638
tel 562.623.9328